WhisperPowerBook
Marine catalogue4

Whisper Power

Generating Confidence

100% silent, 0% emissions

At WhisperPower we are driven by a distinctive challenge: our products are only seen as perfect when you can neither see nor hear them. With this in mind, all our innovation efforts are geared towards creating silent and vibration-free power systems that do their work without interruption. WhisperPower sets itself apart by offering smart innovations that prove their value in everyday operation. Our reliable hybrid technology ensures full comfort at the lowest emissions rate.

In the most challenging conditions you can fully rely on our green and clean one-stop-shop power solution, whether on water, on the road or on land. And that is the reason for our fast growth and worldwide success.

Generating Confidence

WhisperPowerBook
Marine catalogue

Contents

		Page
I	**Welcome to WhisperPower**	**04**
II	**New Products & "New School" Concept**	**06**
III	**100% silence, 0% emission**	**10**
IV	**Systems boatsize 30-100Ft**	**12**
V	**Products and Components**	**30**
	Generating Power	32
	• Diesel generators - Genverter© Piccolo	34
	• Diesel generators - Genverter© Piccolo Range	36
	• Diesel generators - Piccolo - AC Output	38
	• Diesel generators - Piccolo - DC Output	40
	• Diesel generators - Classic Series	42
	• Installation components for generators	48
	• DC and AC alternators	52
	Converting Power	56
	• Inverters, Chargers and Combi's	58
	• Inverters	60
	• Inverter / battery chargers	70
	• Battery chargers	76
	Storing Power	86
	• AGM and GEL batteries	90
	• 2 Volt Cells	94
	• Lithium-ion batteries	96
	• Battery & system monitoring	100
	• Solar modules & charge controllers	104
	Power Distribution	108
	• AC Power, shore power inlets & cables	110
	• AC Power distribution / shore-genset transfer systems	112
	• Isolation transformers / Galvanic isolators	114
	• DC distribution kits	116
	• DC installations	122
VI	**Guideline for system design & system examples**	**138**
VII	**Products for Commercial Vessels and Super Yachts**	**144**
IX	**Company**	
	Service and Warranty	150
	About WhisperPower	152
	Reference list (selection)	154
	Marketing & Promotion	156
X	**Procuct finder A-Z**	160

The information contained in this catalogue is for general information purposes only. While we endeavour to keep the information up to date and correct, we cannot be held responisble for alterations of specifications of products over time.

The reassurance of a global A-brand

WhisperPower has established a leading position in the independent power systems market in a short space of time. Our product range, the majority of which is 'Made in Holland', is now used in more than 50 countries and across numerous market sectors, with the main one being the maritime sector. It is our pleasure to explain why WhisperPower is the best choice.

We provide a smart, efficient and silent way of accessing unlimited power in those places where there isn't a (permanent) connection to the grid. In basic terms, there is the sine wave inverter running uninterruptedly as a silent power source as well as the energy provided by the WhisperPower battery. Our super silent WhisperPower generator automatically starts up, generating electricity to meet consumption demands and thereby charging the battery again. Our alternators and solar panels can also be added as green and clean power sources. This hybrid power system is available from 500 Watts to 100 kW for small day cruisers to fully fledged superyachts. The energetic heart of our in-house developed systems is the Genverter© and its operation principle is similar to that of a hybrid car, for example the Prius. Key advantages include: reduced fuel costs, lower emissions, low noise levels inside and outside the vessel, and if required, full integration of all components in one single housing. The WhisperPower system delivers 12 and/or 24 VDC (48 VDC) and 230 V - 50 Hz / 120 V - 60 Hz or three phase electricity and can also be connected to a heat exchanger for hot water and heating.

True innovation

There is a system for every type of yacht or commercial vessel, tailored to the specific on-board energy consumption. From a small inverter / battery charger with solar panel to heavy duty diesel generators. The speed of the WhisperPower Genverter©, equipped with a permanent magnet alternator, is adjustable so that the optimum balance between desired power, energy consumption and noise level can be set. The Genverter© models are extremely compact and relatively light. The Genverter© Piccolo, with an output capacity of 4kW, only weighs 58 kg!

One-stop shop

WhisperPower is your one-stop shop for the entire system including all necessary electrical components. The WhisperPower adviser, reseller or installer provides, from the outset, system advice demonstrated on a schematic in which all components are included.

Once ordered and delivered, systems equipped with or without a diesel generator are inspected and commissioned ensuring you are assured of a well-functioning system with no weak links. Our All-in-One PowerStation is the perfect one-stop-shop solution - read more on page 6.

From industrial to consumer

Whether you need small devices such as battery chargers and inverters or a large system complete with diesel generator, we have the solution for you. We have specifically developed a product group for the end user market (refit) known as our Orange Label. Easy to install energy equipment that meets the highest safety standards. Devices and systems within our Green label are suitable for use in an industrial application. We deliver systems for offshore, commercial shipping and the transport sector. If required, our equipment can be certified, for example Lloyd's and DNV.

For new build and refit

The WhisperPower product range has been developed with the refit market also in mind. Yacht and ship installations age and in time, need to be renewed. The WhisperPower refit package has been designed to transform an old electrical installation into a long lasting, modern, efficient and silent system in a simple, quick and cost effective manner. Contact our sales team for more information.

Extended warranty

We offer yacht and shipbuilders, who install series of complete WhisperPower systems, the opportunity to extend the warranty period from 2 to 5 years. During this period, you benefit from 'unlimited' service.

Worldwide support

Our customers can count on professional support and service benefitting of an A-brand wherever they are. We invest significantly, both with time and money, in training and educating our resellers and installers. In choosing WhisperPower, you always have the certainty of the worldwide valid WhisperPower GuaranteePlan. We continue to take full responsibility for our products and systems once delivered wherever you are in the world.

Linked in to
other onboard systems

The integration of these various technical systems in to the WhisperPower monitoring and control system enables streamlined and efficient monitoring with one panel. All integration is carried out in close cooperation with two specialist partner companies - Yachtcontrol in the Netherlands and Naviop in Italy. See page 104 for our standard range of Touch panels.

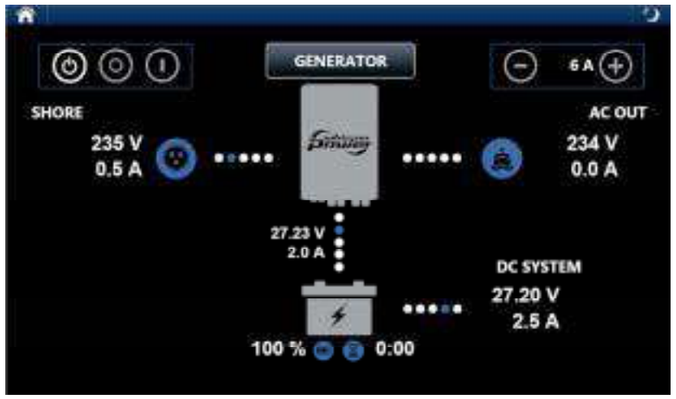

CONTROL REMOTELY

In addition to all of the essential data being collated in to one or multiple screens onboard, it is also possible to monitor the system remotely.
The remote control and monitoring feature enables a secure link to a PC, smartphone or tablet which allows for the remote control of the selected technical systems. In other words, you can check the battery status, camera recordings or temperature on board your vessel from the comfort of your own home.

The use of sophisticated technology ensures ease of use, a clear overview of all required information and an attractive design and screen layout. In addition, it allows for efficient system installation with the ability to monitor and check the functionality of several technical systems from just one or two panels. The software used communicates with NMEA 2000, Modbus and CANopen. Many of the WhisperPower system components and generators are delivered pre-prepared with WhisperConnect to enable connection to these protocols (NMEA 200, Modbus and CANopen) and some can also be connected to various navigation screens as well.

Monitoring and control

Our stylish, easy-to-use TOUCH Monitoring and Control systems can be used in conjunction with additional onboard technical systems as well as the WhisperPower system pages. It provides control and monitoring of multiple technical systems all from one central panel. These systems include:

- Air conditioning (Webasto Comfort compatible)
- Heating (various brands)
- DC Power distribution / digital switching
- Lighting controls and dimming
- Engine controls
- Tank controls
- Rudder angle
- Cameras

Custom design

To add that personal touch, the user interface graphics for the TOUCH series can be customized and designed to the requirements of the client. The vessel name and graphic model can be added and the colour scheme used can be adjusted as per the client's preferences. We are also offering, as an useful option, our WhisperCare remote monitoring & control system.

WhisperCare

WhisperCare enables remote login to the WhisperPower system with smart phone, tablet or PC over a WiFi/ router package with SIM card, available as an option for a WhisperPower system. Features:

- AC shore power input detection
- AC shore power current adjustment
- Intelligent battery monitoring
- Genverter remote start/ stop
- Genverter on/ off automatic start/ stop mode
- Genverter operating hour counter
- AC load read-out
- DC Load read-out

Experience
the new style of yachting

Unlimited 230 V or 120 VAC usage on board, without generator and without any other engine running. The resulting comfort of installing a “Hybrid Power System” from WhisperPower. Our “hybrid” system philosophy explained in detail.

Electric cooking, washing, drying, using the air conditioning - now everything can be done without noise or irritating exhaust fumes with the added benefit of full batteries, always. Until now, sailing and motor yachts have been equipped with traditional bulky and noisy diesel generators that have to run during long periods of time or even non-stop. More often than not, they are installed with a small inverter or combi in order to operate the smaller 230 V or 120 VAC loads, with a low power battery charger. As a result, a long running time is needed to charge the batteries and the generator has to be started up for larger loads, even at inopportune moments.

With the “Hybrid Power System”, the roles are reversed: a high capacity inverter of 4, 7 or 14 kVA provides the 230 V 50 Hz (or 120 VAC / 60 Hz) devices with power from the onboard battery. The much smaller generator, the Genverter, then supplies power when the battery needs recharging. This is achieved with the DC PowerCube charging system that quickly recharges the onboard battery and the bow / stern thruster battery to 100%.

By fitting a WhisperPower high output DC alternator to the propulsion engine, on board AC and DC power consumption will be covered by this extra power generating device.

The WhisperPower ACR voltage regulator will take care of the right multiple step charging of the lead/acid batteries (service, starter or thruster) or single step charging of the PowerPlus Lithium ION batteries.

A big advantage of this system is that the compact and silent generator only runs for a short period of time. Other additional important features include the full capacity still being supplied even with low shore power voltage (up to 90 Volts), the DC PowerCube working on 50 and 60 Hz (great news for world travellers) and the system delivering pure DC which is desirable for both the battery and the connected lighting.

Featured The Smart Electrical Power System

“New School” modular hybrid power systems

- 4 or 7 kVA version with a 2 cylinder Genverter M-GV 2 Whisper generator and DC PowerCube charger (4.3 kW), incl. stylish Touch screen control panel
- 7 kVA version delivered with a 3 cylinder Genverter M-GV 3M-GV Whisper generator and 2 x DC PowerCube charger (8.6 kW), incl. Touch screen control panel
- 14 kVA version delivered with a 3 cylinder Genverter M-GV 3 PLUS and 3 x DC PowerCube charger (12 kW), incl. Touch screen control panel

“On my 86 ft motor yacht, I was completely dependent on the diesel generators for my electricity supply. With 2 pieces of 33 kVA generators with extra damping sound shields I was well equipped and I had plenty of power. Because we had far too much noise on board and the boats in the area were not really happy with us, we went looking for a solution. With WhisperPower’s system we can now use 90,000 BTU air conditioning during the night without running engines, including the refrigerators, freezer cabinets and all other AC consumers. Fantastic. We have installed the small WhisperPower GV / 3 10 kW night generator as a back-up and is completely inaudible, outside and inside. “

Klaus Fischer, owner of a 86 ft Sunseeker Manhatten motor yacht

100% silence,
0% emission

This is the unique WhisperPower solution! Unlimited AC & DC power usage on board, without a non-stop running generator or other auxiliary engines. Made possible by WhisperPower's unique high power sine wave inverters, superfast battery chargers, long life lithium or lead-acid batteries and intelligent power management systems.

Our Genverter generator are backing up the power need as an auxiliary power source, running for a short period of time to recharge the batteries. In case more generator power is needed, WhisperPower's variable or fixed speed AC generators are the ideal choice, compact and extremely silent, for single or three phase AC power requirements. By choosing a WhisperPower system you are ensured of the best components, from one supplier and just one point of contact for commisioning, service and support on a world wide base.

For every type of vessel
the right energy package

The following pages detail a number of systems which have been developed for sailing and motor yachts across a range of sizes, starting with the 35ft category up to 100 ft. We offer a wide range of products and components for yachts and ships exceeding 100 ft, such as our Supreme Pro battery chargers and our ION PowerPlus batteries which can be found in the product section of our Marine PowerBook catalogue. The required system for a particular yacht can be determined using our Comfort Guide, as shown here on the right.

How the Comfort Guide works

In the lefthand column a number of example devices are listed. Each of these devices consume a quantity of energy from the battery, the inverter, shore power and the alternator. The more devices, the greater the energy consumption, the larger the system. We have developed five basic systems, which vary in capacity, and enable different varieties to be compiled.

Example shown on the right

35 - 45 foot yacht with its relevant, actual energy specifications. Result: Advanced System recommended - see pages 14-15 for further details.

The benefits of a complete system

- Standard 2 year warranty
- Option to extend to 5 years
- Commissioning as standard
- Worldwide on board service
- Maintenance Contract
- For newbuild or retrofit

Advanced Comfort Guide

Equipment	12 V	24 V	230 V
GPS & chart plotter	●		
Autopilot	●		
Depth Sounder	●		
VHF	●		
Radar	●		
Navigation lights	●		
Reading light	●		
Refrigerator	●	●	
Freezer	●	●	
Service battery	●	●	
Starter battery	●	●	
Bow thruster Battery	●	●	
Phone Charger			●
iPod Charger			●
Laptop			●
Tablets			●
Coffee machine			●
Induction cooking			●
Microwave			●
Hair dryer			●
Television			●
Air conditioning 20,000BTU			●
Washing			○
Battery charger			○
Combi			●

Symbol Key

- ○ = Not applicable
- ● = On board; 12 V power supply
- ● = On board; 24 V power supply
- ● = On board; 230 V / 50 Hz power supply from inverter or shore power
- ◐ = On board; 230 V / 50 Hz power supply from WhisperPower generator or inverter
- ● = On board; 230 V / 50 Hz power supply from WhisperPower generator or shore power

Basic System (generator optional)

Essential comfort

Our Basic system is perfect for sail or motor yachts from 20 - 35ft. The system provides more than enough electricity for several 12 VDC consumers, while 2 or 3 separate batteries can be charged (starter, service and bow thruster), and it even offers a 230 VAC (120 VAC) outlet for devices such as a Nespresso machine, smart phone chargers, laptop etc. The Basic system can be extended with a Genverter© Piccolo 5, 4.4kVA diesel generator, enabling to use one or two selfcontained airconditioning units, for example a 10,000 and 16,000 BTU Webasto unit which can be operated simultaneously. This system is ideal to provide auxiliary power for outboard engine powered Centre Console boats.

Basic System (generator optional)

Basic Comfort Guide

Equipment	12 V	24 V	230 V
GPS & chart plotter	🟡		
Autopilot	🟡		
Depth Sounder	🟡		
VHF	🟡		
Radar	🟡		
Navigation lights	⚪		
Reading light	⚪		
Refrigerator	⚪	🟢	
Freezer	⚪	🟢	
Service battery	⚪	🟢	
Starter battery	⚪	🟢	
Bow thruster Battery	⚪	🟢	
Phone Charger			🟠
iPod Charger			🟠
Laptop			🟠
Tablets			🟠
Coffee machine			🟠
Kettle			🟠
Microwave			🟠
Hair dryer			🟠
Television			🟠
Air conditioning 10,000BTU			🟠
Washing			🟠
Batter charger			⚪
Combi			🟠

Symbol Key

- ⚪ = Not applicable
- 🟡 = On board; 12 V power supply
- 🟢 = On board; 24 V power supply
- 🟠 = On board; 230 V / 50 Hz power supply from inverter or shore power
- 🟠/🔵 = On board; 230 V / 50 Hz power supply from WhisperPower generator or inverter
- 🟢 = On board; 230 V / 50 Hz power supply from WhisperPower generator or shore power

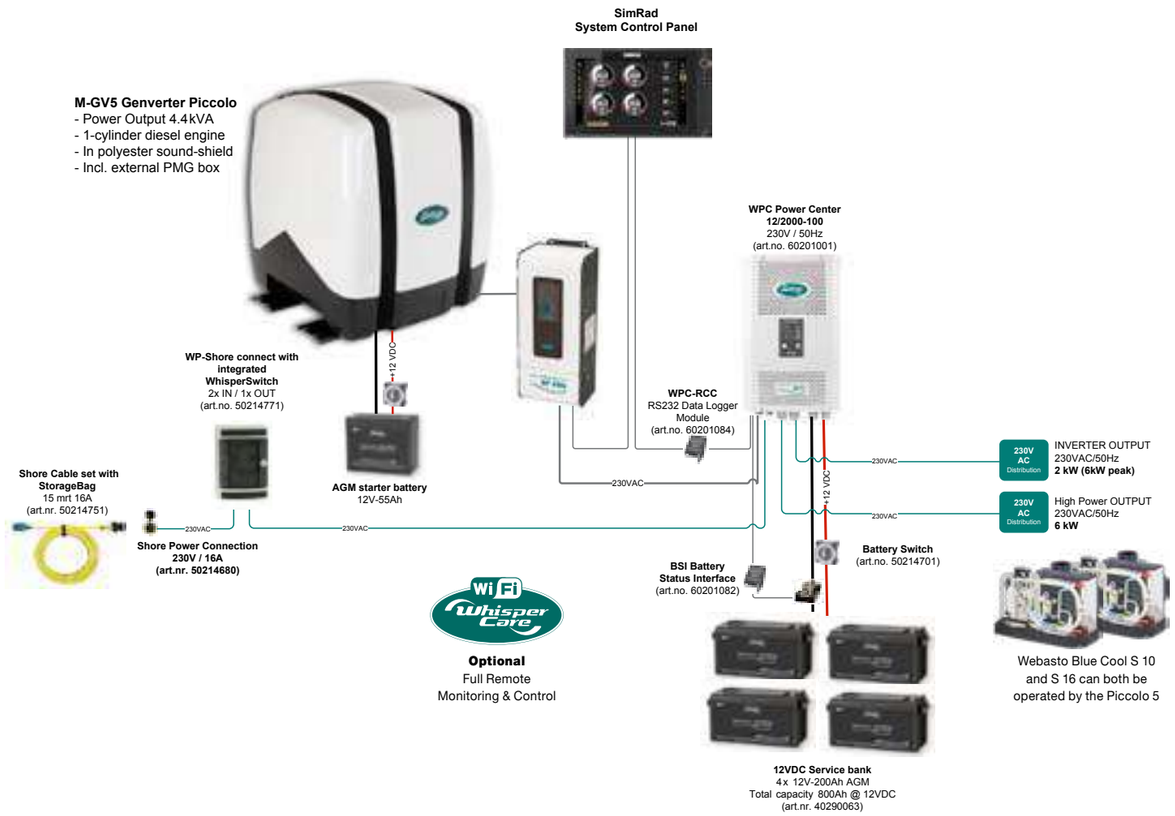

PHOTO: COURTESY OF ED HOLT PHOTOGRAPHY

Basic System (without generator)

Basic Comfort Guide

Equipment	12 V	24 V	230 V
GPS & chart plotter	🟡		
Autopilot	🟡		
Depth Sounder	🟡		
VHF	🟡		
Radar	🟡		
Navigation lights	⚪		
Reading light	⚪		
Refrigerator	⚪	🟢	
Freezer	⚪	🟢	
Service battery	⚪	🟢	
Starter battery	⚪	🟢	
Bow thruster Battery	⚪	🟢	
Phone Charger			🟠
iPod Charger			🟠
Laptop			🟠
Tablets			🟠
Coffee machine			🟠
Kettle			🟠
Microwave			🟠
Hair dryer			🟠
Television			🟠
Air conditioning 16,000BTU			🟠
Washing			🟠
Batter charger			⚪
Combi			🟠

Symbol Key

- ⚪ = Not applicable
- 🟡 = On board; 12 V power supply
- 🟢 = On board; 24 V power supply
- 🟠 = On board; 230 V / 50 Hz power supply from inverter or shore power
- 🟠/⚪ = On board; 230 V / 50 Hz power supply from WhisperPower generator or inverter
- 🟢 = On board; 230 V / 50 Hz power supply from WhisperPower generator or shore power

Basic system (without generator)

Unlimited power

All the onboard comfort you need, sufficient power for both the navigation and the communication equipment and fully air conditioned. All of that without a generator. That is what WhisperPower can do. We deliver systems based on advanced, safe and proven Lithium ION batteries connected to the DC PowerCube charging systems which are able to quickly charge the batteries whenever 230 VAC - 50 Hz or 120 VAC - 60 Hz is available. The AC PowerCube inverter takes care of providing that welcome cup of coffee, cool air and all your other comforts.

> *"With this advanced power system more than 500 kg of weight has been saved without the need to compromise on comfort. The weight reduction was key to being able to achieve the target speed. There is always plenty of power on board; the alternators on the main engine charge the WhisperPower Lithium ION battery bank through special converters from the starter batteries."*

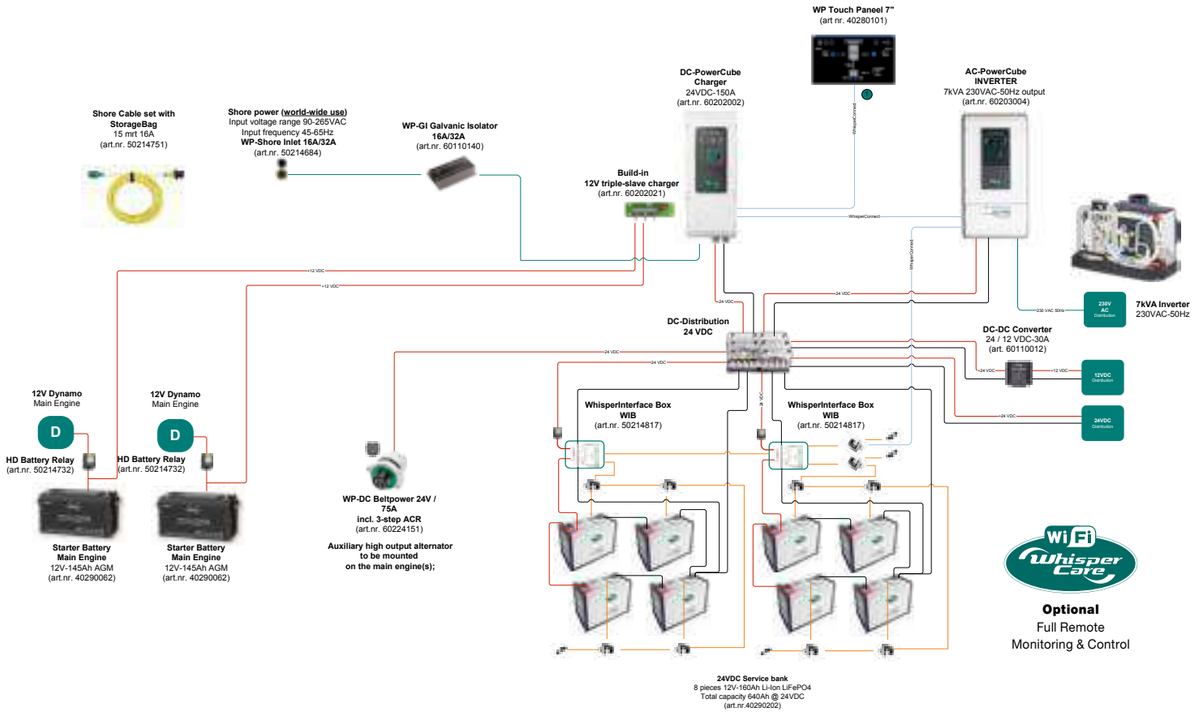

Advanced System
Remarkable Comfort

There are all different kinds of yachts in the 35-45ft range, from a day cruiser to a fully equipped circumnavigator. The Advanced system enables more onboard comfort and ensures full independence from the shore thanks to the WhisperPower Genverter© 5 or 8 kVA diesel generator. The WPC PowerCentre provides 230 V silent, emission-free power and charges the batteries and is adding 3.5 kW to the generator power. The PowerSupport function enables extra power if shore power is limited. Solar panels charge the batteries during the day. The Whisper BeltPower, mounted as a 2nd alternator on the main engine, recharges the batteries extremely quickly whilst motoring. Perfect Choice!

Advanced System

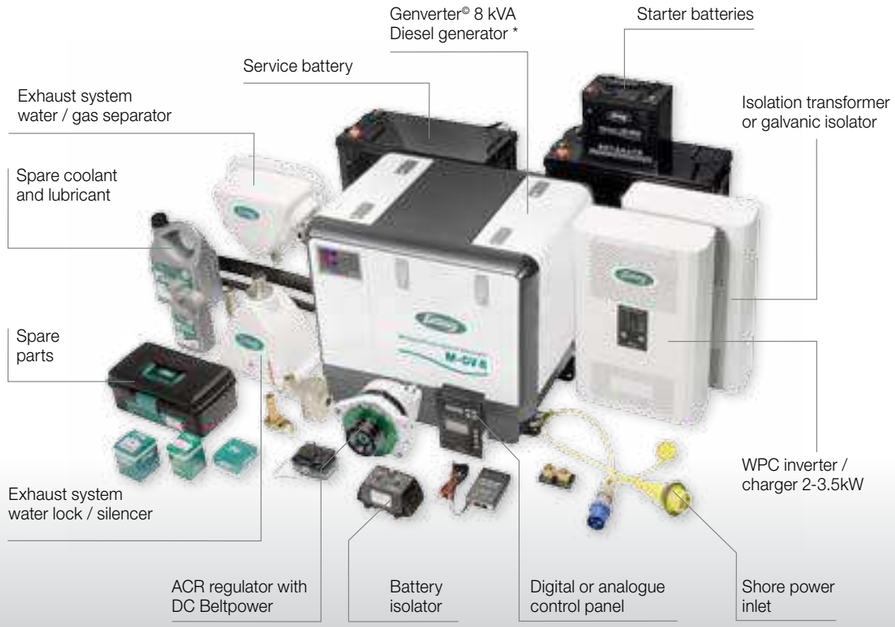

* WhisperPower's Genverter generators can be supplied with sheet metal (picture) or polyester sound shield (Piccolo range)

Advanced Comfort Guide

Equipment	12 V	24 V	230 V
GPS & chart plotter	●		
Autopilot	●		
Depth Sounder	●		
VHF	●		
Radar	●		
Navigation lights	○		
Reading light	○		
Refrigerator	○	●	
Freezer	○	●	
Service battery	○	●	
Starter battery	○	●	
Bow thruster Battery	○	●	
Phone Charger			●
iPod Charger			●
Laptop			●
Tablets			●
Coffee machine			●
Kettle			●
Microwave			●
Hair dryer			●
Television			●
Air conditioning 24,000BTU			●
Washing			●
Batter charger			○
Combi			●

Symbol Key

- ○ = Not applicable
- ● = On board; 12 V power supply
- ● = On board; 24 V power supply
- ● = On board; 230 V / 50 Hz power supply from inverter or shore power
- ◐ = On board; 230 V / 50 Hz power supply from WhisperPower generator or inverter
- ● = On board; 230 V / 50 Hz power supply from WhisperPower generator or shore power

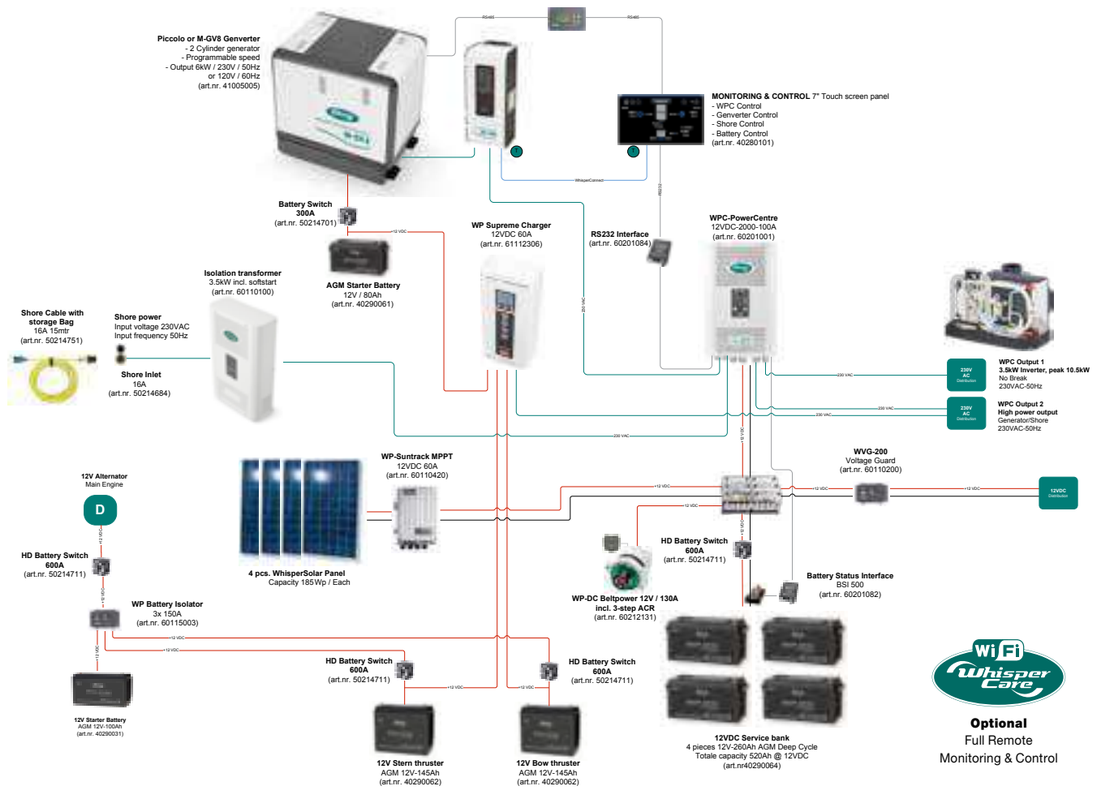

Admiral System

Unlimited comfort, just like home

When it comes to the 45-50ft class, there is also a great variety in terms of vessel type. Motor yachts for inland sailing, sailing yachts for inland lakes and coastal waters as well as fully equipped yachts ready for a trip around the world. Whatever the vessel type, the Admiral system is a complete electrical system which provides total independence and optimal comfort on board. Gas isn't required for cooking as it can all be done electrically, air conditioning can be installed, as well as a water maker, refrigerator / freezer, dishwasher and washing machine, in fact, anything really. Unlike most on-board power systems, this system can be plugged into any socket in the world, from 90-260 VAC, at any frequency. No limits, no boundaries!

Admiral System

Admiral Comfort Guide

Equipment	12 V	24 V	230 V
GPS & chart plotter	●		
Autopilot		●	
Depth Sounder	●		
VHF	●		
Radar		●	
Navigation lights		●	
Reading light	●		
Search light		●	
Deck lights		●	
Service battery		●	
Starter battery	●		
Bow thruster Battery		●	
Refrigerator		●	
Freezer		●	
Heating		●	
3 Phone Chargers			●
3 iPod Chargers			●
2 Laptops			●
2 Tablets			●
2 Televisions			●
Hair dryer			●
Coffee machine			●
Kettle			●
Dishwasher			●
Combi-Microwave			●
4 Ring electric hob			●
Washingmachine			●
Airco 24,000BTU			●
Batter charger			●

Symbol Key

- ○ = Not applicable
- ● = On board; 12 V power supply
- ● = On board; 24 V power supply
- ● = On board; 230 V / 50 Hz power supply from inverter or shore power
- ◐ = On board; 230 V / 50 Hz power supply from WhisperPower generator or inverter
- ● = On board; 230 V / 50 Hz power supply from WhisperPower generator or shore power

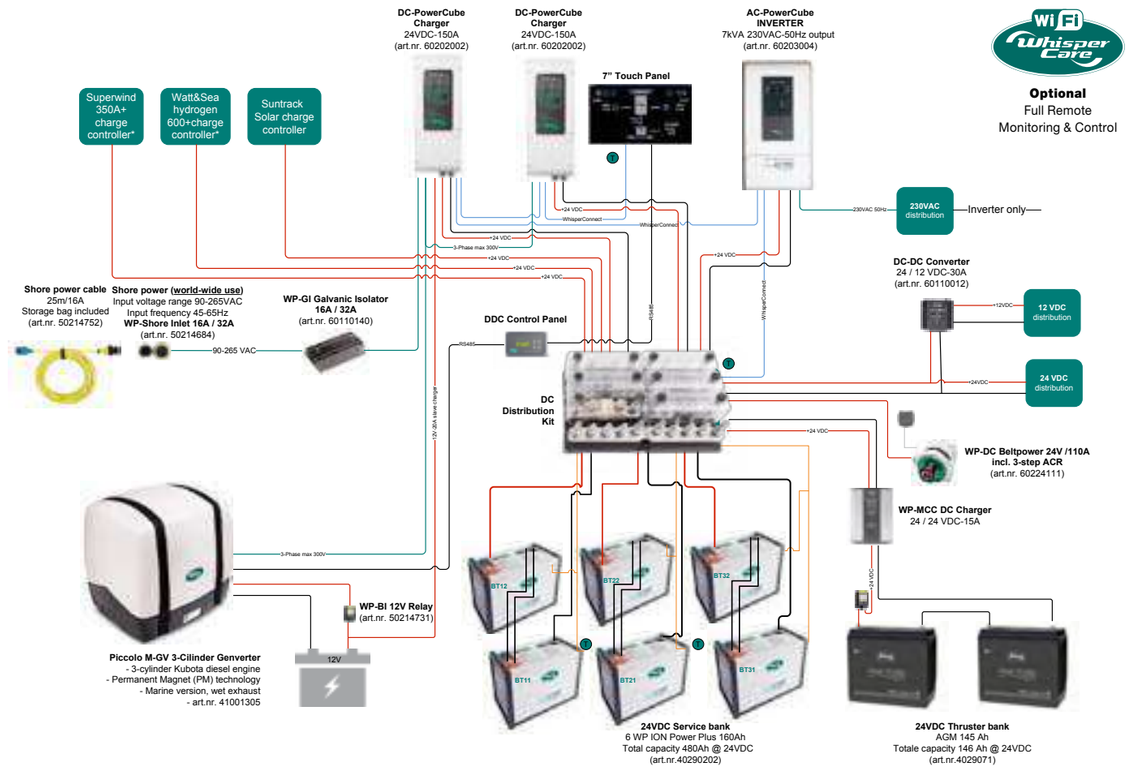

Royal System

Royal Comfort Guide

Equipment	12 V	24 V	230 V
GPS & chart plotter	●		
Autopilot		●	
Depth Sounder	●		
VHF	●		
Radar		●	
Navigation lights		●	
Reading light		●	
Search light		●	
Deck lights		●	
Service battery		●	
Starter battery	●		
Bow thruster Battery		●	
Centrale Heating		●	
3 Phone Chargers			●
3 iPod Chargers			●
2 PC's			●
2 Tablets			●
3 TV screens			●
2 Coffee machines			●
Kettle			●
Steam oven			●
Microwave			●
4 Ring electric hob			●
Seakeeper			●
Airco 30,000BTU			●
2 DC PowerCubes			●

Symbol Key

- ○ = Not applicable
- ● = On board; 12 V power supply
- ● = On board; 24 V power supply
- ● = On board; 230 V / 50 Hz power supply from inverter or shore power
- ◐ = On board; 230 V / 50 Hz power supply from WhisperPower generator or inverter
- ● = On board; 230 V / 50 Hz power supply from WhisperPower generator or shore power

Royal System

Absolute comfort and luxury

Owners of larger yachts set high standards when it comes to comfort and independence. Long trips are standard as is spending long periods of time on board. 'Home from home' means unlimited luxury and this can place a lot of demand on the electrical system. In many cases the shore power provision is insufficient and therefore the generator is used a lot. The WhisperPower Royal system is available in two versions: the traditional version with a fixed rpm Whisper and Genverter© night set and the Genverter© "New School" versions.

"The reason we have chosen WhisperPower installations, including the battery systems, is because their systems are robust and reliable. This is exactly what we need for our Wajer Yachts, all of which are delivered to customers with an onboard service contract. In this respect, as far as WhisperPower is concerned, we never have to worry."

Dorus Wajer from Wajer Yachts BV

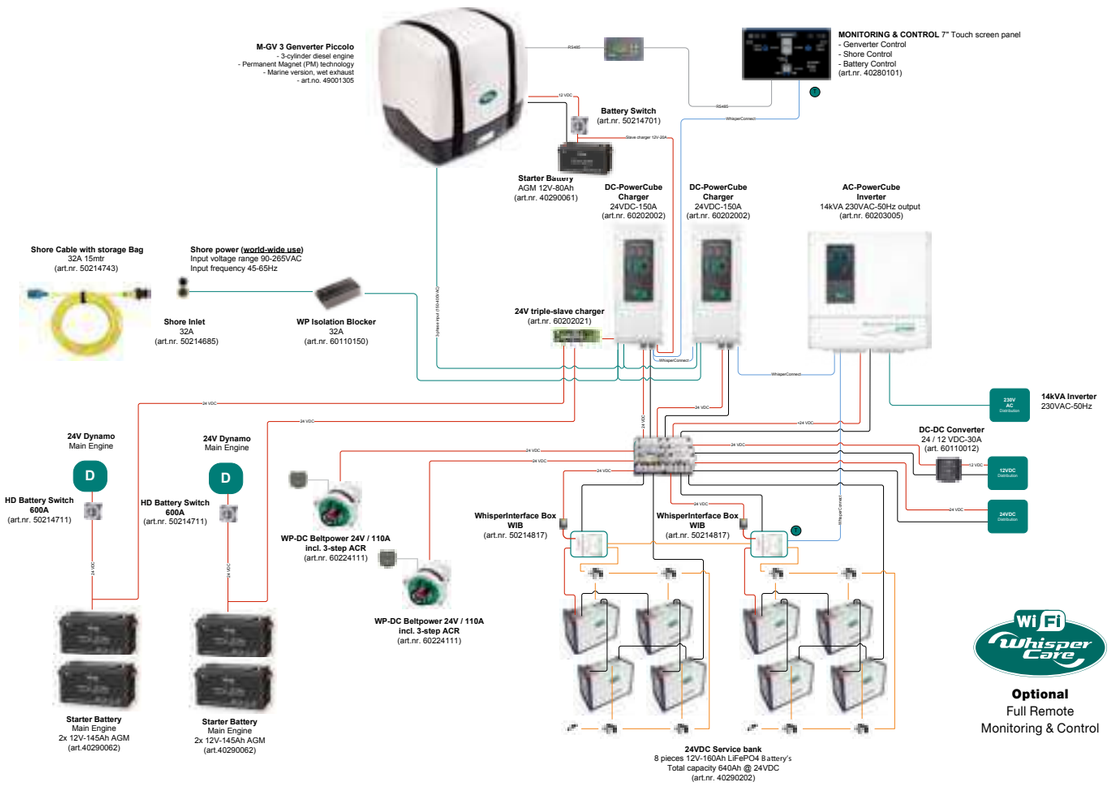

Royal System (All electric)

Sustainable power and propulsion

Multi hulls are ideally suited for WhisperPower's "New School" electrical power system. Whether it is for a traditional powered yacht or an electric powered vessel, WhisperPower has a perfect solution, ensuring minimal diesel engine operating time with optimal system efficiency and silence as a result. The global energy transition is ongoing, and has reached now the marine world as well. WhisperPower has a strong commitment to support electrical propulsion and all-electric on board power systems, including those of multi-hulls. WhisperPower's powerfull and light-weight systems are ideal for fast sailing or motor catamarans and can be integrated with the electrical propulsion system. A superior match and perfect integration! Read more at page 26 for full electrical propulsion solutions.

Royal System (electric)

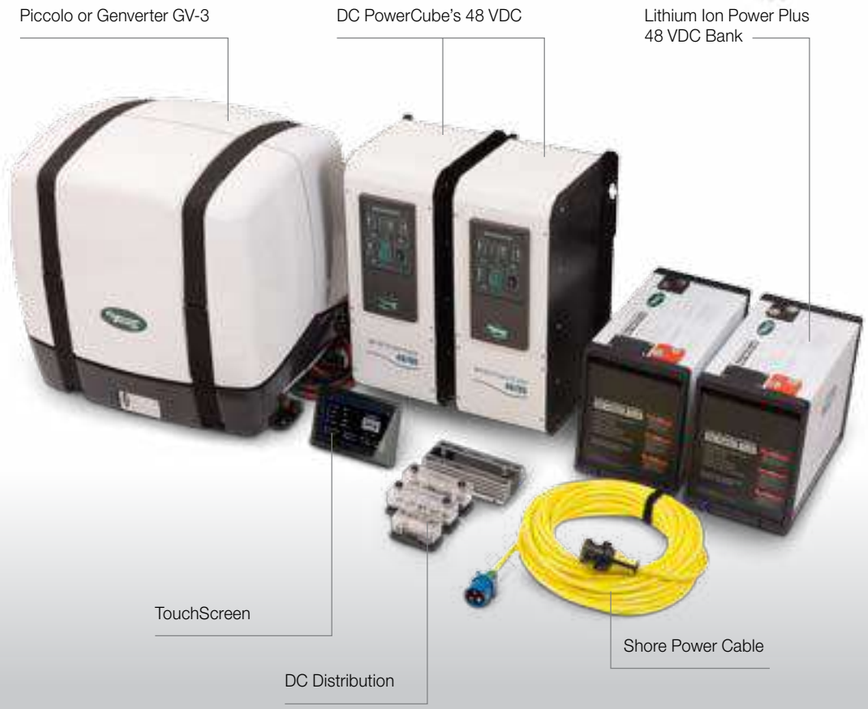

Royal Comfort Guide

Equipment	12 V	24 V	230 V
GPS & chart plotter	●		
Autopilot		●	
Depth Sounder	●		
VHF	●		
Radar		●	
Navigation lights		●	
Reading light		●	
Search light		●	
Deck lights		●	
Service battery		●	
Starter battery	●		
Bow thruster Battery		●	
Centrale Heating		●	
3 Phone Chargers			●
3 iPod Chargers			●
2 PC's			●
2 Tablets			●
3 TV screens			●
2 Coffee machines			●
Kettle			●
Steam oven			●
Microwave			●
4 Ring electric hob			●
Dive compressor			●
Airco 30,000BTU			●
2 DC PowerCubes			●

Symbol Key

- ○ = Not applicable
- ● = On board; 12 V power supply
- ● = On board; 24 V power supply
- ● = On board; 230 V / 50 Hz power supply from inverter or shore power
- ◐ = On board; 230 V / 50 Hz power supply from WhisperPower generator or inverter
- ● = On board; 230 V / 50 Hz power supply from WhisperPower generator or shore power

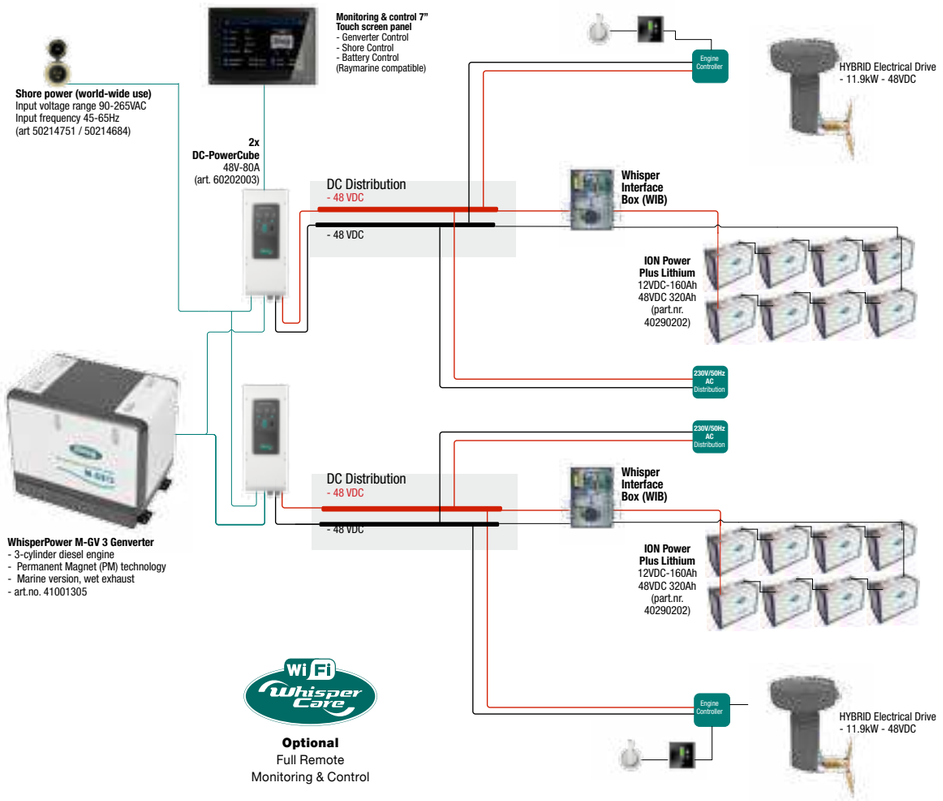

Royal Plus Comfort Guide

Equipment	12 V	24 V	230 V
GPS & chart plotter	●		
Autopilot		●	
Depth Sounder	●		
VHF	●		
Radar		●	
Navigation lights		●	
Reading light	●		
Search light		●	
Deck lights		●	
Service battery		●	
Starter batteries	●		
Batteries		●	
Refrigerators		●	
Freezers		●	
Heating		●	
3 Phone Chargers			●
3 iPod Chargers			●
2 Laptops			●
2 Tablets			●
4 Televisions			●
Hair dryer			●
2 Coffee machines			●
Kettle			●
Dishwasher			●
Combi-Microwave			●
6 Ring electric hob			●
2 Washing machines			●
2 Air conditionings 2 x 45,000BTU			●
Water maker			●
Batter charger			●

Symbol Key

- ○ = Not applicable
- ● = On board; 12 V power supply
- ● = On board; 24 V power supply
- ● = On board; 230 V / 50 Hz power supply from inverter or shore power
- ◐ = On board; 230 V / 50 Hz power supply from WhisperPower generator or inverter
- ● = On board; 230 V / 50 Hz power supply from WhisperPower generator or shore power

Royal Plus System

All the comfort in perfect silence

Motor or sailing yachts of 60 ft and more are in general fitted with a large generator, which should run all day for the benefit of air conditioning units. The perfect alternative is now available without losing comfort! By installing a WhisperPower "New School" system, generator running time can be reduced with at least 50%. In very hot regions, a combination of a Classic generator and a battery based Genverter might turn out to be the ideal solution. The entire system including 1500 rpm generator, prepared for full integration, all supplied by WhisperPower.

"The new WhisperPower system certainly seems to be the Egg of Columbus. On the E6, our new 65 ft model, it is running perfectly: Seakeeper on and air conditioning on, generator off, no problem. I've been out on the sea with westerly winds of force 6: with a cruising speed of 15 knots, no problem at all, in fact you could even describe it as extremely comfortable. Furthermore, with this sort of wind and the waves, plus a top speed of 22 knots out on the North Sea was still without problems. The WhisperPower system continued to function perfectly under all of these circumstances.

Anton van den Bos, Director of Neptune Marine Shipbuilding, builder of Elling Yachts

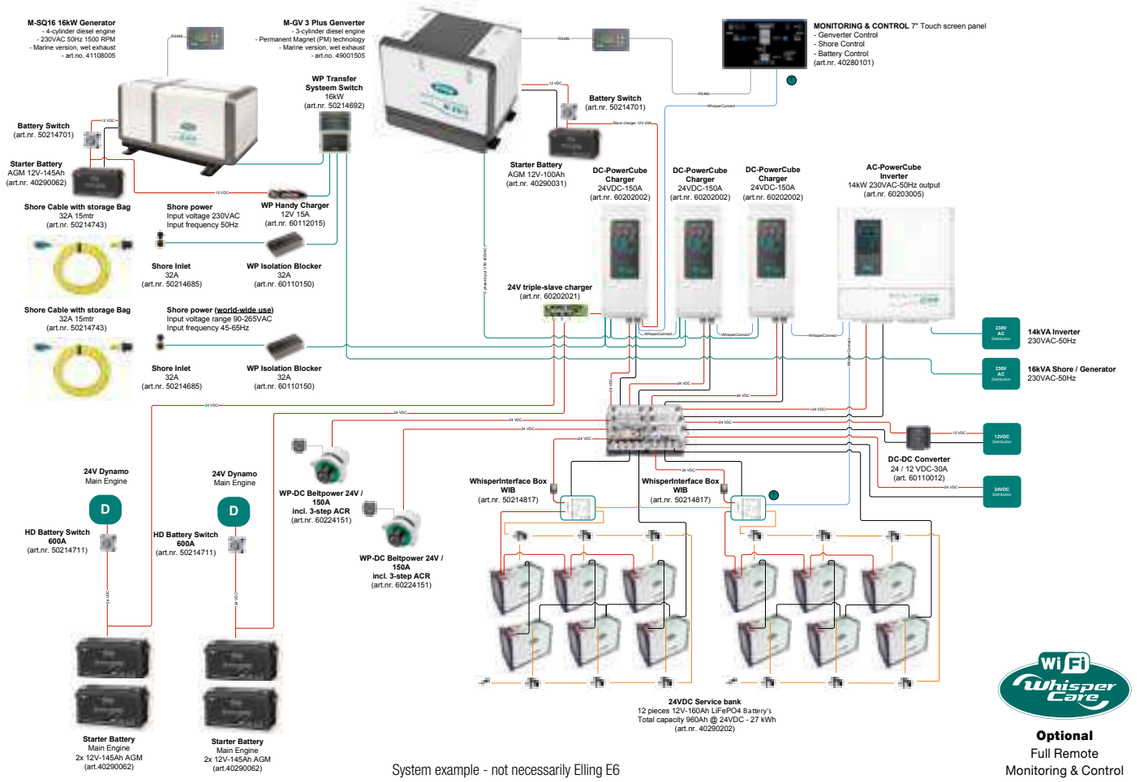

System example - not necessarily Elling E6

BOAT
60ft plus

Mega System

Mega System

100% silence, 0% emission

Yachts are getting bigger in size while the energy consumption per ft increases even faster. The use of larger diesel generators is therefore inevitable to generate more electrical power for A/C, galleys, lights, etc. With all the disadvantages of that: irritating audible noise, vibration inside the yacht, negative effects on the environment, high operational costs! With WhisperPower's high power inverter/battery systems, large size consumers including A/C can be provided with electrical power for a large part of the day (anchor time, overnight stays) WITHOUT a diesel engine running. Adding a small super silent, low emission Genverter night generator will extend the silent time even longer. Operating a 100,000 BTU A/C system, or even more, from the batteries? WhisperPower's high power inverter/ battery systems are just doing it! If the system configuration is done the right way, shore power converters are no longer needed which is a serious cost saving.

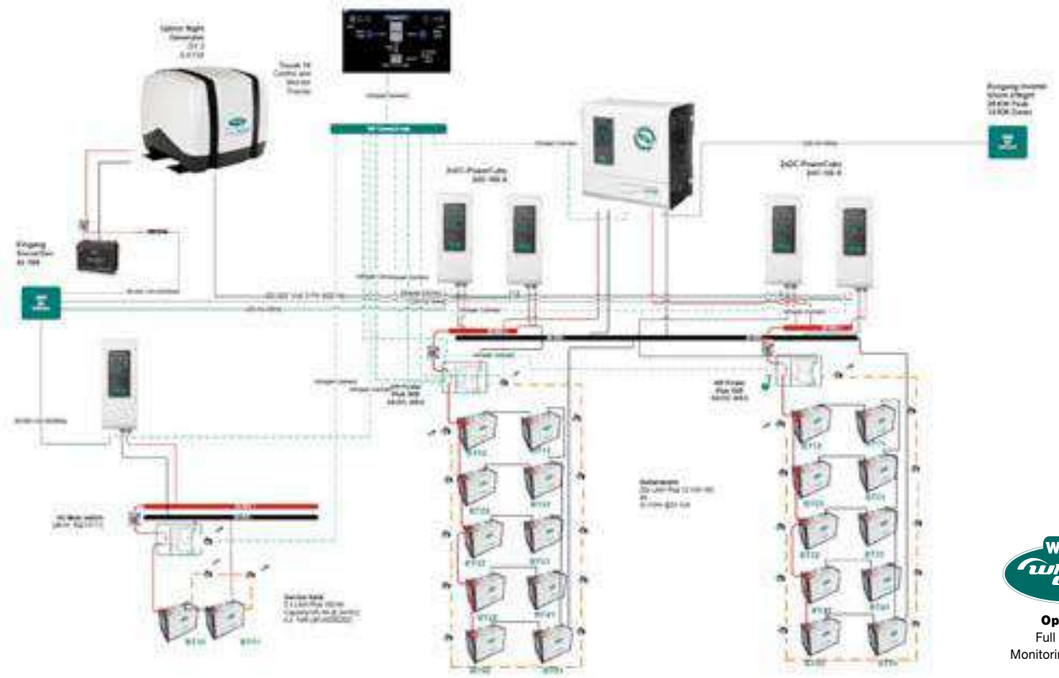

Optional
Full Remote
Monitoring & Control

Clean Electrical
Propulsion and Power Management

WhisperPower is committed to play an essential role in the "new" world of electrical propulsion and power management systems by developing smart variable speed generators, designed to ensure a reliable power provision, available at any time in a silent and smooth way, including hotel loads. Together with Torqeedo we have developed the Range Extender, an ultra quiet and compact diesel generator that serves as a "homer" in case the battery operation is at its end and has to be recharged.

"Torqeedo is pleased to enter into this alliance with WhisperPower. The product synergy is perfect. We are also planning to work together with WhisperPower on Mega Yacht systems - the company has accumulated a lot of knowledge in recent years."

For more information visit www.whisperpower.com/news

Christoph Ballin,
co-founder and CEO of Torqeedo

Hybrid E-propulsion with Range Extender

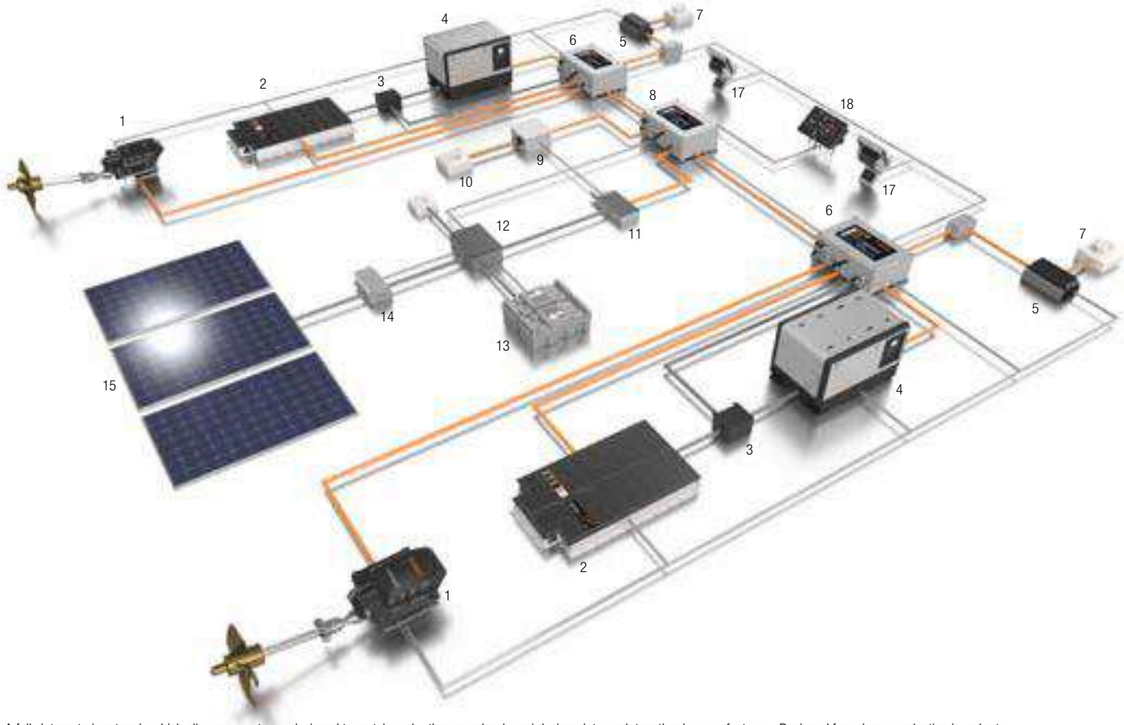

A fully integrated system in which all components are designed to match each other seamlessly and designed to work together in a perfect way. Designed for volume production in order to meet the price expectations of the users. With prime power from the lithium ion batteries and back-up from a smart Genverter style Range Extender. This is the perfect hybrid solution for sailboats between 40 and 80 feet and for commercially operated hybrid vessels

Hybrid drive and complete power management on board – everything from a single integrated system

1 Powerful electric motor: delivers between 25 and 100 kW of continuous power at 360 V. Available as inboard, outboard or saildrive.

2 360 V high-capacity lithium battery system

3 12 V batteries: system power supply for starting up the high-voltage battery system and the diesel generator. The Deep Blue system manages these batteries autonomously.

4 Efficient state-of-the-art diesel generator. Only runs when power requirements exceed the renewable sources and available battery capacity. Runs at optimum operating point feeding the 360 V system directly.

5 Onshore power chargers: for charging the system from the AC mains supply in port.

6 Drive connection box: the heart of the drive management system. This is where all the connections and system management functions for the drive train are concentrated.

7 Onshore power connection: The large battery bank can be recharged with sufficient energy for the voyage when in port.

8 System connection box: this is where the connections and system management functions are linked together to form a complete system and where other (convenience) functions for larger boats and yachts are integrated.

9 AC inverter: provides independence from power conditions on land. Voltage and frequency can be freely configured.

10 Isolated AC power system (120/240 V AC current, 50/60 Hz): equipment and power sockets are connected via an AC power distributor.

11 Bi-directional DC/DC converter: connects the 24 V DC power system with the battery system, allowing the free transfer of power.

12 24 V on-board power system distributor: connects the 24 V DC on-board power system to the central system. Allows various classes of device to be connected on board. Differentiates between peak loads, general loads and safety-relevant loads.

13 24 V on-board batteries: act as a buffer and redundant power store for the entire on-board electrical system.

14 Solar charge controller: converts power generated by photovoltaic into the right voltage for the on-board power system. Highly efficient thanks to MMP tracking.

15 Photovoltaic modules: generate solar energy as additional power for the system

16 24 V on-board system connection: for different classes of device on board, depending on individual requirements.

17 Electronic throttle: controls the performance of the electric motors. The twin remote throttle allows individual control of two drive trains.

18 Display with onboard computer: allows the flexible management and modification of parameters controlling the usage patterns of the system.

Generating Power

Generating Power

Generating power can be achieved in a number of ways. Installing a WhisperPower silent generator resolves the question of energy on board permanently.

Advanced Classic Power Systems fixed speed

Our quiet running, low speed diesel generators are engineered and produced in our factory in Friesland, the Netherlands. Our Made-in-Holland 1500/1800 RPM Super Quiet (SQ) Pro sets are designed for non-stop operation under harsh circumstances in commercial and re-creational environments. We utilize top class engines compliant to the latest emission standards which includes Stage V for Europe and Tier 4 for North America.

- **Power ratings from 10 – 50 kVA**
- **Single or three phase, 50 or 60 Hz**
- **Indirect water cooled technology**
- **Aircooled back-end, AVR regulated**
- **Standard with sound guard, optional without**
- **Many options including mass-free and PTO**
- **Type approval optional, CCS and Russian River as standard**

Go to page 42

Go to page 34

Advanced Power Systems adjustable speed

Our Genverter© range of compact generators combines the latest diesel engine technology with a new way of producing electrical power. Instead of adding an alternator with fixed speed on the back of the fly-wheel, we have designed a very compact permanent magnet alternator (PM), located just behind the engine. As a result, these systems are much smaller and lighter compared to traditional generators. The generator RPM can be fixed to a position offering the optimal balance between RPM, output power, audible noise and vibration.

- **Power ratings from 4.4 – 18 kVA**
- **Superior single phase AC Power (230 VAC / 50 Hz, 120 VAC / 60 Hz) output**
- **Optional 24/48 VDC output via DC PowerCube**
- **Indirect cooling of engine and back-end (> 1 cyl)**
- **5 or 7 Inch Touch panel (optional)**
- **WhisperConnect (CAN) connection as standard**
- **Compact, light weight and extremely silent**

Genverter© Piccolo 5

the little power house

ONLY 68 KG WEIGHT
68 KG
ONLY 68 KG WEIGHT

The WhisperPower Genverter© Piccolo 5 is the smallest, quietest and most powerful of its kind. Thanks to the electronic PMG inverter output, it delivers the ideal power quality for all your comfort equipment including, amongst others, washing machine, air conditioning, electrical cooking, hob, battery chargers and combi's.

Compact and light - 68 kg

- Modern diesel engine with 4.4kVA capacity at 3600rpm
- 4kW electric capacity at maximum speed
- Indirect water cooling - for fresh or sea water
- Constant engine temperature, no soot or oil deposit on the water
- Flywheel and alternator functions combined

Advanced

- Highly efficient thanks to use of super magnets / permanent magnet technology
- Adjustable speed settings - optimal position can be set
- Optional Automatic Speed Control
- PowerModule-Genverter© in the output ensures perfectly stable frequency and voltage
- Therefore smooth operation of all connected devices is guaranteed

Choose from AC or DC variations

- Standard Versions for 230 Volt 50 Hz (100-120 V 50/60Hz) devices
- Version for charging the 24/48 VDC batteries: model GV/1 with DC PowerCube, which is also the powerful land connection of 16 A (3.5kW)
- Adjustable to 60 Hz, without effecting rpm
- Available with complete Touch screen power management & monitoring
- WhisperConenct bus connectivity to most navigation brands

Attractive, standard start/stop panel delivered as standard to operate the Piccolo remotely.

5 inch Touch panel, optional.
Art. Nr. 40280105

Piccolo 5
adjustable speed diesel generator
4.4 kVA / 3.5 kW at 3600rpm
8 kVA, 36 A peak power,
230 V - 50 Hz +/-5% 50 Hz +/- 0.1%
117 V - 60 Hz +/-5% 60 Hz +/- 0.1%
Height 520 mm, width 470 mm,
length 450 mm, weight 58 kg.
PMG inverter 7 kg.

"WhisperPower is an undisputed leading brand. We are more than happy to use their generators as a power source on board - we are particularly taken by the new Piccolo: small, lightweight, powerful and with a very acceptable noise level."

Auke van de Werff, Director of Volharding Stavoren Shipyard, builder of Sturier and Dutchman yachts.

Unique engine

The small Piccolo 5 models are fitted with a modern diesel designed by WhisperPower, entirely for the purpose of generating power the smooth way. The oil is cooled by a heat exchanger designed for indirect watercooling, the circulation water pump is driven by a PTO (no belt). The WP1 engine is designed to operate between 2400 and 3600 rpm. Warranty 1000 hrs, equivalent to a car distance of 100.000 km.

Quiet & vibration free

Vibrations are just as irritating as an over noisy diesel engine. The customized shock mounts, combined with the sound enclosure, result in a super silent and virtually vibration free set-up. All parts needed to be serviced are located at one side of the Genverter. Picture: detail of our WhisperPower WP 1 diesel engine (Shockmount integrated in engine block).

Highest power quality

Devices such as air conditioning units and electric motors are often controlled by electronics to improve the efficiency and performance. Traditional generators may fail to operate these appliances. All Piccolo models are equipped with a PMG module (Power Module Genverter©) to ensure that the voltage and frequency within the rotating speed range remain perfect so that all the equipment continues to run without interruption. Surge power is generated by the PMG to start up inductive loads.

Piccolo 5

Any space will do

All our Piccolo models are extremely compact and can be installed in the smallest location. Only minor air ventilation is needed. At picture an installation of a Piccolo 5 in a day cruiser

Ease of installation

All installation parts are available in kit form ensuring an fast and easy job to do. Not a single part or component is needed, all are included.

Complete energy system

At the back side of this brochure you will find a complete electrical power system including a Combi inverter/charger, batteries, shore power connection, monitoring etc. This is our great service to you as our customer: we offer complete single brand solutions for the complete on board electrical power system. Everything from one hand. If needed supplied with DC distribution/digital switching, our TOUCH Plus system.

Genverter© Piccolo Range

Little ones grow bigger

Following the world wide success of the Piccolo 4/5 1 cylinder Genverter variable speed generator, we have extended our Piccolo range to power ratings of 15 kVA. Perfect in size and weight, super silent and virtually vibration free.

Compact, silent and light weight

- Modern, low emission marine diesel engine
- Emission level: EPA – Tier 4 as standard
- Compact, super noise-damping polyester sound guard
- Available power ratings 8,10,12 and 15 kVA
- 230 V 50 Hz or 120 V 60 Hz, adjustable by user

Extremely energy efficient

- Efficiency of 96% in stead of 75% (traditional systems)
- Lower fuel costs
- Rotating speed can be set to load demand
- External PMG inverter providing the perfect sine wave
- Maximum stability of the Hz at load/ no load and rpm variations

Choose from AC or DC variations

- AC single phase with PMG inverter
- DC versions with 1,2 or 3 DC PowerCubes
- Charge power for (lithium) batteries via DC PowerCube
- DC-system includes shore to ship charging
- Charge power from 4.3 kW – 13 kW

Supplied as standard with DDC panel and DDC connection box

Optional TOUCH 5 or 7 control panel with extended information and remote access

Perfect power

WhisperPower's PMG inverter incorporates two main functions: this robuste, electronic device converts the generated power (input) into a pure sine wave with fixed Hz (output). The rotating speed is programmable from 2000 to 2800 rpm, select the rotating speed for the needed power. The PMG power inverter is also the power management device, offering full read-out via WhisperConnect Can to the Touch panel. Voltage and frequences can be selected.

Low emission, water cooled engine

Only the best 2 & 3 cylinder engines are applied: long lasting, reliable, silent engines, complying with EPA /Tier 4 (USA standard) and Stage V (European standard). The engine and PM alternator back-end are connected into one cooling circuit and kept on a constant temperature via a heat exchanger.

Ideal for A/C systems

All Piccolo models including the little Piccolo 5 are a perfect power source for airconditioning systems. We recommend Webasto Self Contained or Blue Cool chiller systems as they are compact, silent and energy efficient. WhisperPower's and Webasto's remote monitoring can be combined into one TOUCH panel of 7 Inch.

Piccolo 8

"New School" power system

Turn it around! Install a high power inverter for all your AC consumers and a small Genverter generator, in stead of installing a large genset and a small inverter. Use the energy storage as your power reservoir and enjoy extended zero emission & silent periods

One-stop-shop

We provide high class parts to install the Piccolo the right way: exhaust hoses with waterlock and water/gas silencer complete with clems, a waterinlet kit with strainer, a siphon breaker kit, a fuel filter, a starter battery kit etc.

Optimal sound and vibration control

A robuste polyester sound guard, optimal tuning of rpm vs power rating and effective engine mounting inside the enclosure result in a audible noise level of less than 55 dBA and virtually no vibration

Silent, Compact, Light-weight

The Range

The M-GV Genverter range was initially only available with a metal sound guard. With the polyester sound guard, we have taken a new direction of compact and very quiet adjustable speed generators that meet the ultimate requirement of the user: perfect silence and virtually no vibration. The version with the metal sound guard is still available, at these pages we have listed our new Piccolo range.

	PICCOLO 4/5		PICCOLO 8	PICCOLO 10	PICCOLO 12	PICCOLO 15
	49012005 Piccolo 5 - automatic rpm control* 49002005 Piccolo 5 - 230 V / 50 Hz ** 49002006 Piccolo 5 - ungrounded, wet exhaust ** 49002055 Piccolo 4 - 120 V / 60 Hz** 49003005 Piccolo 5 - 120 V / 60 Hz ***		49005005 standard, wet exhaust - 230 V / 50 Hz 49005055 standard, wet exhaust - 120 V / 60 Hz	49009005 standard, wet exhaust - 230 V / 50 Hz 49009055 standard, wet exhaust - 120 V / 60 Hz (US voltage splitphase)	49006005 standard, wet exhaust - 230 V / 50 Hz 49006055 standard, wet exhaust - 120 V / 60 Hz (US voltage splitphase)	49007005 standard, wet exhaust - 230 V / 50 Hz 49007055 standard, wet exhaust - 120 V / 60 Hz (US voltage splitphase)
MAIN SPECIFICATIONS						
Nom. performance in kVA [1]	0 - 5.0		0 - 8.0	0 - 10.0 [1]	0 - 12.0	0 - 15.0
Nom. performance in kW [1]	0 - 4.0		0 - 6.4	0 - 8.0	0 - 10.0	0 - 12.0
Cont. performance in kVA [1]	0 - 4.5		0 - 7.2	0 - 9.0 [2]	0 - 11.0	0 - 13.5
Noise level [2]	54 dB(A) at 7 m, 65 dB(A) at 1 m		51 dB(A) at 7 m, 60 dB(A) at 1 m	51 dB(A) at 7 m, 60 dB(A) at 1 m	54 dB(A) at 7 m, 65 dB(A) at 1 m	54 dB(A) at 7 m, 65 dB(A) at 1 m
Engine Speed	2400 .. 3600 rpm adjustable or automatic		2200 .. 2800 rpm, adjustable	2200 .. 2800 rpm, adjustable	2200 .. 3600 rpm, adjustable	2200 .. 3200 rpm, adjustable
Generator	Permanent Magnet Alternator (PMA)		Permanent Magnet Alternator (PMA)	Permanent Magnet Alternator (PMA)	Permanent Magnet Alternator (PMA)	Permanent Magnet Alternator (PMA)
Inverter Module	WP-PMG frame 1 Plus		WP-PMG frame 1 Plus	WP-PMG frame 2	WP-PMG frame 2	WP-PMG frame 3
Nominal voltage / frequency	230 V / 50 Hz, (or 120 V / 60 Hz)		230 V / 50 Hz, (or 120 V / 60 Hz)	230 V / 50 Hz, (or 120 V / 60 Hz)	230 V / 50 Hz, (or 120 V / 60 Hz)	230 V / 50 Hz, (or 120 V / 60 Hz)
Peak power 2 s	200%		200%	200%	200%	200%
Harmonic distortion	< 5%		< 3%	< 3%	< 3%	< 3%
Frequency tolerance	± 0,1%		± 0.1%	± 0.1%	± 0.1%	± 0.1%
DIESEL ENGINE SPECIFICATIONS						
Engine	WhisperPower WP1		Kubota Z482 (Mitsubishi optional)	Kubota D722 (Mitsubishi optional)	Mitsubishi L3E	Kubota D1105
Cylinder volume	309 cc (one cylinder)		479 cc (two cylinder)	719 cc (three cylinder)	952 cc (three cylinder)	1.123 cc (three cylinder)
Bore & stroke	78 × 76 mm		67 × 68 mm	67 × 68 mm	76 × 70 mm	78 × 78.4 mm
Air consumption	< 0.42 m³/min		< 0.95 m³/min	< 1.22 m³/min	< 1.72 m³/min	< 1.43 m³/min
Cooling system	indirect		indirect	indirect	indirect	indirect
Fuel consumption (no load - full load)	0.8-1.2 l/hr		1.2-2.5 l/hr	1.2-3 l/hr	1.2-3 l/hr	1.5-4 l/hr
Starter battery charge current	charger 12 V/7A		alternator 12 V/12.5 A	alternator 12 V/12.5 A	alternator 12 V/40A	alternator 12 V/40A
DIMENSIONS & WEIGHT						
Length × width × height (cabinet)	450 × 461 × 520 mm		660 × 550 × 622 mm	740 × 550 × 622 mm	740 × 550 × 622 mm	875 × 570 × 690 mm
Length × width × depth (PMG)	420 × 196 × 148 mm		420 × 196 × 148 mm	451 × 200 × 174 mm	451 × 200 × 174 mm	542 × 385 × 255 mm
Dry weight (cabinet + PMG)	68 kg + 7 kg		155 kg + 9.9 kg	175 kg + 9.9 kg	175 kg + 9.9 kg	210 kg + 9.9 kg
Dry exhaust / wet exhaust	Ø 1 inch BSP / Ø 40 mm		Ø 1 inch BSP / Ø 40 mm	Ø 1 inch BSP / Ø 40 mm	Ø 1 inch BSP / Ø 40 mm	Ø 1 inch BSP / Ø 40 mm
Oil dipstick	service side		top and side	top and side	top and side	top and side
Max. operating angle	25º in all directions		25º in all directions	25º in all directions	25º in all directions	25º in all directions
CONTROL PANEL						
Standard	start / stop panel		start / stop panel	start / stop panel	start / stop panel	start / stop panel
Optional	2nd start/stop panel, Touch panel		2nd start/stop panel, Touch panel	2nd start/stop panel, Touch panel	2nd start/stop panel, Touch panel	2nd start/stop panel, Touch panel
CABEL EXTENSION						
60201470	PEK (Picollo extension kit)		PEK (Picollo extension kit)	PEK (Picollo extension kit)	PEK (Picollo extension kit)	PEK (Picollo extension kit)

*) Automatic rpm control **) Adjustable rpm modus ***) Supplied with Inverter PMG Frame 2
1) Specificied at cos phi 0.8, up to 40 °C ambient temperature. Specifications valid up to 100 mtrs altitude whereafter derating 2) Preliminary data

Complete Piccolo system – for the entire installation go to page 46

PowerModule Genverter© (PMG)

Our Genverter© AC versions consists of two parts: an engine part with PM alternator for generating power and an electronic control cabinet, the PMG module. 'Raw' electricity, which has been generated by the Permanent Magnet alternator, is stabilized to pure sine wave voltage via this cabinet. The PMG is connected to the Genverter© by a three wire cable. A monitoring panel with status, voltage and frequency read outs is included as standard.

More power in combination with WPC

By installing a WhisperPower Centre inverter / charger, the Genverter's© AC output power can be temporarily increased. (by 2-5 kW) The PMG output is coupled to the WPC input which feeds the power from the Genverter© to the consumer devices. Whenever the Genverter© experiences too much load, the WPC provides additional power by using the battery. With restricted/ limited use, the Genverter© automatically switches off if set to automatic mode. See also page 72

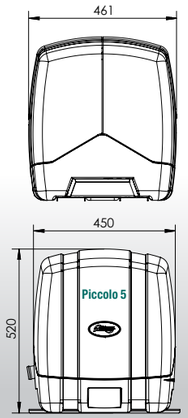

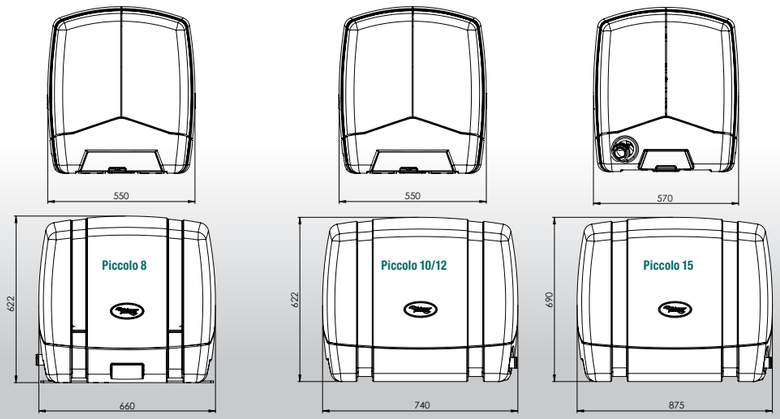

WhisperPower's main manufacturing facility is located in Drachten (Friesland), the Netherlands. Our entire operation and processes conform to ISO 9001-2008 standards. A significant number of our WhisperPower diesel generators are also certified to various national standards, for example Chinese and Russian Maritime Type Approvals due to the strict investigative procedures and regulations for compliance such as audits that can be carried out by third party officials.

DC generator / inverter system

For cases when a constant high power consumption isn't required, installing a Genverter© system with the DC PowerCube, combined with an AC PowerCube inverter, can prove to be a smart decision. The advantage of this system is that a non-stop AC power supply is always available. This is thanks to the 4, 7 or 14 kVA AC PowerCube inverter which is connected to one or multiple onboard batteries being charged by one or several DC PowerCubes.

Whenever the 24 VDC / 48 VDC batteries need to be recharged, the Genverter© starts up automatically. At the same time, the DC PowerCube is connected to the shore power - during shore power connection, the various onboard batteries are charged with a maximum of 120 A (3.5kW). Using the remote control panel, supplied as standard, the shore power can be set to the required ampere value (4,6,8,10,16A). The DC PowerCube also features a charging socket for 24 VDC batteries (or 48 VDC).

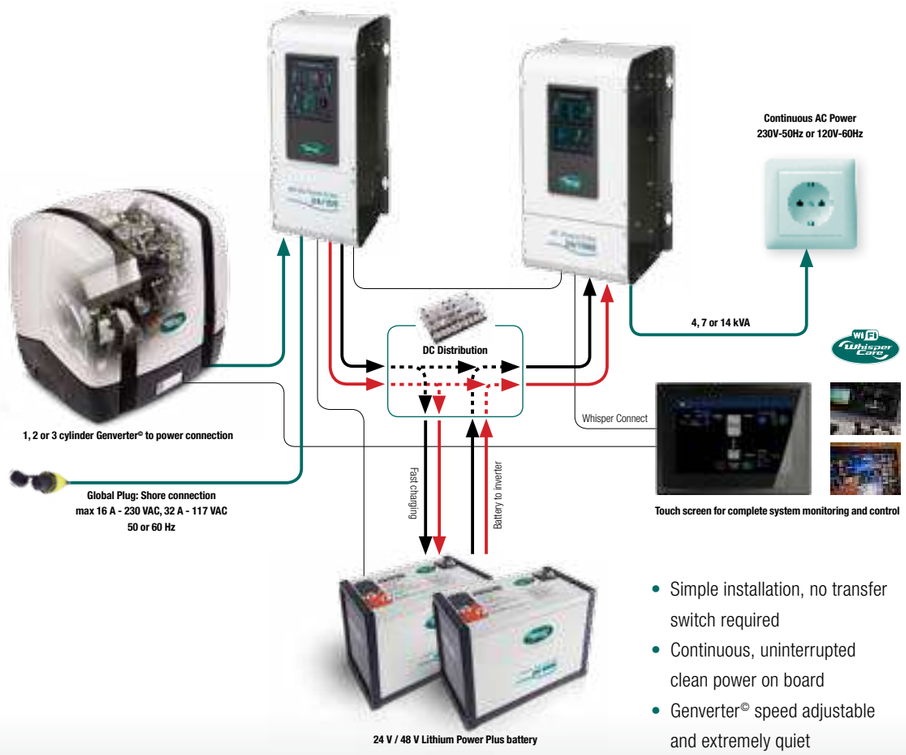

- Simple installation, no transfer switch required
- Continuous, uninterrupted clean power on board
- Genverter© speed adjustable and extremely quiet
- Fast charge with correct and constant engine load
- Plug-in worldwide
- Low fuel consumption, minimal engine maintenance

Go to **Page 74** for more information

	PICCOLO GV-1	PICCOLO GV-2	PICCOLO GV-3	PICCOLO GV-3+
	Genverter© DC series 49001005 GV/1 wet exhaust 60202002 DC PowerCube 24/150 or 60202003 DC PowerCube 48/80 (with reduced current)	49001105 GV/2 Kubota, wet exhaust 49001205 GV/2 Mitsubishi, wet exhaust 60202002 DC PowerCube 24/150 or 60202003 DC PowerCube 48/80	49001305 GV/3 Kubota, wet exhaust 49001405 GV/3 Mitsubishi, wet exhaust 60202002 DC PowerCube 24/150 or 60202003 DC PowerCube 48/80	49001505 GV/3+ Kubota, wet exhaust 60202002 DC PowerCube 24/150 or 60202003 DC PowerCube 48/80
MAIN SPECIFICATIONS				
Continuous Power (24 / 48 VDC)	3.0 kW	4.3 kW	8.6 kW	12 kW
Number of DC PowerCubes	1	1	2	3
Nominal voltage / frequency	24/48 VDC	24/48 VDC	24/48 VDC	24/48 VDC
Charge characteristics	bulk, absorption, float	bulk, absorption, float	bulk, absorption, float	bulk, absorption, float
Noise level [1]	54 dB(A) at 7 m, 65 dB(A) at 1 m	51 dB(A) at 7 m, 60 dB(A) at 1 m	51 dB(A) at 7 m, 60 dB(A) at 1 m	54 dB(A) at 7 m, 65 dB(A) at 1 m
Rpm range	2800 .. 3200 rpm adjustable or automatic	1500 .. 3000 rpm, adjustable	1500 .. 2500 rpm, adjustable	1500 .. 2500 rpm, adjustable
Generator	Permanent Magnet Alternator (PMA)	Permanent Magnet Alternator (PMA)	Permanent Magnet Alternator (PMA)	Permanent Magnet Alternator (PMA)
DIESEL ENGINE SPECIFICATIONS				
Engine	WhisperPower WP1	Kubota Z482 (Mitsubishi optional)	Kubota D722 (Mitsubishi optional)	Kubota D1105
Cylinder volume	309 cc (one cylinder)	479 cc (two cylinder)	719 cc (three cylinder)	1.123 cc (three cylinder)
Bore & stroke	78 × 76 mm	67 × 68 mm	67 × 68 mm	87 × 78.4 mm
Air consumption	< 0.42 m³/min	< 0.95 m³/min	< 1.22 m³/min	< 1.43 m³/min
Cooling system	indirect	indirect	indirect	indirect
Fuel consumption (no load - full load)	0.8-1.2 l/hr	1.2-2.5 l/hr	1.2-3 l/hr	1.5-4 l/hr
Starter battery charge current	charger 12 V/7A	alternator 12 V/12.5 A	alternator 12 V/12.5 A	alternator 12 V/40 A
DIMENSIONS & WEIGHT				
Length × width × height (cabinet)	450 × 461 × 520 mm	660 × 550 × 622 mm	740 × 550 × 622 mm	875 × 570 × 690 mm
Length × width × depth (DC PowerCube)	575 × 221 × 316 mm	575 × 221 × 316 mm	575 × 221 × 316 mm	575 × 221 × 316 mm
Dry weight (cabinet + DC PowerCube)	68.8 kg + DC PowerCube	155 kg + DC PowerCube	175 kg + DC PowerCube	210 kg + DC PowerCube
Dry exhaust / wet exhaust	Ø 1 inch BSP / Ø 40 mm	Ø 1 inch BSP / Ø 40 mm	Ø 1 inch BSP / Ø 40 mm	Ø 1 inch BSP / Ø 40 mm
Oil dipstick	service side	top and side	top and side	top and side
Max. operating angle	25º in all directions	25º in all directions	25º in all directions	25º in all directions
CONTROL PANEL				
Standard	start / stop panel - DDC	start / stop panel - DDC	start / stop panel - DDC	start / stop panel - DDC
Optional	2nd start/stop panel, Touch panel 7 inch	2nd start/stop panel, Touch panel 7 inch	2nd start/stop panel, Touch panel 7 inch	2nd start/stop panel, Touch panel 7 inch

[1] Preliminary data

CCR II

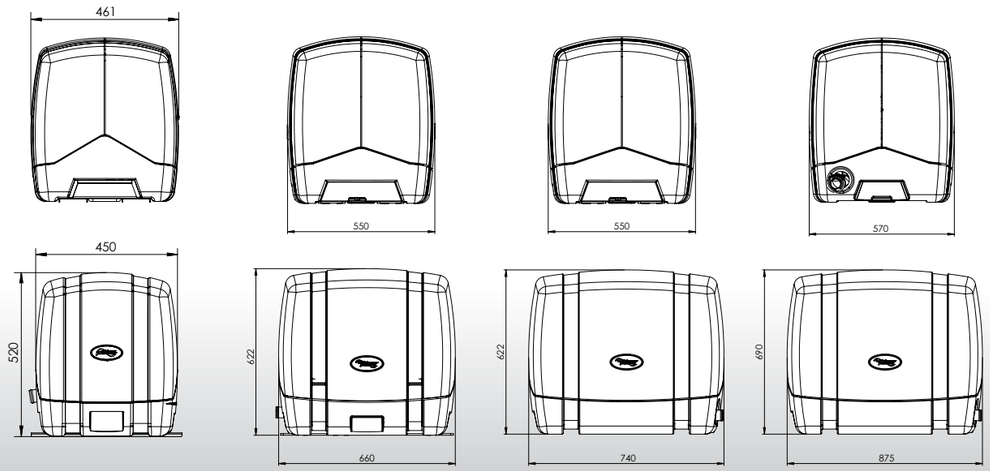

PICCOLO GV-1 PICCOLO GV-2 PICCOLO GV-3 PICCOLO GV-3+

Diesel Generators
Classic Series

Over the past 20 years, Whisper generators have built a strong reputation. They are regarded to be durable and reliable power solutions, meeting the challenges of commercial and high-end recreational marine applications. While the high rpm 3000/3600 generators have been replaced by the quiet and compact Genverter series, our 1500/1800 fixed rpm range has undergone a major upgrade.
The WhisperPower SQ Pro range is THE solution for applications where a constant level of high quality, non-stop electrical power is required. Available from 10 kVA to 50 kVA, for single and three-phase output, complete with or without sound guard, inclusive advanced control panels and all necessary installation parts to ensure a durable installation.

General description
- 1500 rpm, 1 or 3 phase, 50 Hz
- 1800 rpm, 1 or 3 phase, 60 Hz
- Robuste AVR voltage regulation
- Electronic governor for best powerquality
- Aircooled, industrial back-end
- Water cooled diesel engine
- Compact and silent

Features
- Indirect water cooling
- Deep Sea controls as standard *)
- All connections pre-mounted
- Plug-and-play installation
- Industrial power quality
- Parallel connection optional
- Mass-free and PTO optional

Benefits
- Highest quality standards
- Home design
- Manufactured in Holland
- Various options - flexibility
- World wide distribution and support
- One - stop-shop
- All installations parts from one address

*) Pro models

CCR II

As the general manager of WhisperPower China, I received the WhisperPower Customer of the Year award in 2017. Our sales organization in Shanghai had sold, in numbers, most fixed rpm units that year and therefore received the WhisperPower Export Award. Our Chinese customers opt for the WhisperPower product, even though they have to pay more for it. Reliability, longevity, in short, the quality of the WhisperPower products are always decisive and make the WhisperPower very popular. It helps our products are CSS certified according to the Chinese laws.

Michael Shi, General Manager WhisperPower China

Sound shield
Professional, high class, effective sound shield with easy access to all sides of the Generator

Service side
One-sided service, perfect access to all maintenance related components

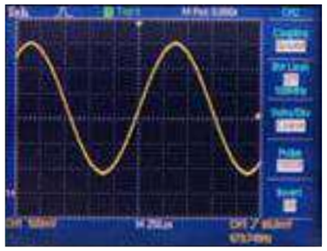

Perfect sinewave
Industrial power quality for a disturbance free power provision for standard and sensitive consumers

Optimal Sound Reduction
All models of the SQ range come standard with a robust sound guard with corrosion proof metal plating and heavy insulation material for optimal sound reduction.

Units can also be delivered without a sound cover. Ask for our OPEN UNITS w/o sound shield.

DDC Remote
DDC Remote panel as used in the past for our standard versions, still standard supply of our non-Pro versions (M-SQ 12, M-SQ16)

- One touch start button
- V/A/Hz read-out
- Various user menus
- Automatic start/stop

From DDC to Deep Sea Controls
Important feature of our new SQ Pro range is the new 7 inch full colour Touch Screen Control which is easy to link to existing analogue or digital networks. Our traditional DDC controls are still used for the non-Pro versions.

Some key features and benefits of the new control & power management panels:
- Remote communications (RS232, RS485 x2, Ethernet).
- Genset parallel funcionality included (ask for more detail)
- Provides secure and simple off site monitoring.
- Front panel mounting
- Enables fault conditions to be resolved quickly and provides instant system information to aid preventative maintenance.
- Graphical displays showing, charts, meters, power display, graphs and engine status information.
- Information is displayed clearly and in a universal format for all users
- Language by choice

Diesel generators M-SQ Pro

1500 / 1800rpm

	M-SQ[1] 10 PRO 1-PHASE	M-SQ[1] 15 PRO 1-PHASE	M-SQ[1] 16 1-PHASE	M-SQ[1] 18 PRO 1-PHASE		M-SQ 22.5 PRO 1-PHASE	M-SQ[1] 25 PRO 1-PHASE	M-SQ[1] 27 PRO 1-PHASE		
	41209005 230 V / 50 Hz - 10 kVA / 8 kW	41207005 230 VAC / 50 Hz -15 kVA 41207055 120-240 V / 60 Hz -20 kVA	41108005 230 V / 50 Hz - 16 kVA 41108006 230 V / 50 Hz - 16 kVA 41108030 230 V / 50 Hz - 16 kVA	41208055 230 V / 50 Hz - 20 kVA 41208355 120-240 V / 60 Hz - 20 kVA		41201205 230 V / 50 Hz - 22.5 kVA 41201255 120 V-240 V / 60 Hz - 25 kVA	41202005 230 V / 50 Hz - 25 kVA 41202006 230 V / 50 Hz - 25 kVA 41202030 230 V / 50 Hz - 25 kVA	41201005 230 V / 50 Hz - 27 kVA 41201006 230 V / 50 Hz - 27 kVA 41201030 230 V / 50 Hz - 27 kVA		
			M-SQ[3] 16 3-PHASE	M-SQ[3] 18 PRO 3-PHASE				M-SQ[3] 27 PRO 3-PHASE	M-SQ[3] 32 PRO 3-PHASE	M-SQ[3] 50 PRO 3-PHASE
			41108305 230-400 V / 50 Hz- 16 kW	41208305 230 V-400 VAC / 50 Hz - 18 kVA				41201305 230-400 V / 50 Hz - 27 kVA 41201306 230-400 V / 50 Hz - 27 kVA 41201330 230-400 V / 50 Hz - 27 kVA	41201405 230 - 400 V / 50 Hz - 32 kVA 41201455 120 - 240 V / 60 Hz - 35 kVA	41201505 230-400 V / 50 Hz - 50 kVA
MAIN SPECIFICATIONS										
Nominal power 25º	10 kVA / 8 kW	15 kVA / 12 kW	16 kVA / 16 kW	18 kVA / 14.4 kW		22.5 kVA / 18 kW	25 kVA / 20 kW	27.5 kVA / 22 kW (25kW, 3 phase)	32 kVA / 30 kW	50 kVA / 40 kW
Nominal power 110% 25º	8.8 kW	13.2 kW	16 kW	16 kW		19.8 kW	22 kW	25 kW (27kW, 3 phase)	30 kW	48 kW
Continuous power 40º	7.2 kW	10.8 kW	14.5 kW	13 kW		16.2 kW	18 kW	19.8 kW (25kW, 3 phase)	27 kW	40 kW
Noise level	54dB	55dB	55dB	55dB		58dB	58dB	58dB	58dB	58dB
Rpm range	1500/1800 rpm	1500/1800 rpm	1500/1800 rpm	1500/1800 rpm		1500/1800 rpm	1500/1800 rpm	1500/1800 rpm	1500/1800 rpm	1500 rpm
Generator	Aircooled	Aircooled	Water-cooled	Aircooled		Aircooled	Aircooled	Aircooled	Aircooled	Aircooled
Voltage Regulation	AVR	AVR	Capacitor	AVR		AVR	AVR + EBS	AVR + EBS	AVR + EBS	AVR
Nominal voltage / frequency	230 V / 50 Hz	230 V / 50 Hz	230 V / 50 Hz - 3x 400 VAC	230 V / 50 Hz - 3x 400 VAC		230 V / 50 Hz - 3x 400 VAC	230 V / 50 Hz - 3x 400 VAC	230 V / 50 Hz - 3x 400 VAC	230 V / 50 Hz - 3x 400 VAC	230 V / 50 Hz - 3x 400 VAC
Peak power 2 s	200 %	200 %	200 %	200 %		200 %	300 %	300 %	300 %	300 %
Harmonic distortion	< 5 %	< 5 %	< 5 %	< 3 %		< 3 %	< 3 %	< 3 %	< 2 %	< 3 %
Frequency tolerance	± 5%	± 5%	± 3%	± 5%		± 5%	± 5%	± 5%	± 1%	± 1%
DIESEL ENGINE SPECIFICATIONS										
Engine	D1105 - 3 cylinder	V1505 - 4 cylinder	Mitsubishi S4Q2 - 4 cylinder	Mitsubishi S4Q2 - 4 cylinder		Mitsubishi S4S - 4 cylinder	Mitsubishi S4S - 4 cylinder	Mitsubishi S4S - 4 cylinder	Mitsubishi S4S - 4 cylinder	Perkins-Sabre 4.4 GM
Cylinder volume	1123 cc in³	1505 cc in⁴	2505 cc in⁴	2505 cc in⁴		3331 cc in⁴	3331 cc in⁴	3331 cc in⁴	3331 cc in⁴	4.4 litre
Bore & stroke	78 x 78.4 mm	78 x 78.4 mm	88 × 103 mm	88 × 103 mm		94 × 120 mm	94 × 120 mm	94 × 120 mm	94 × 120 mm	105 x 127 mm
Air consumption	1.1 m³ / min	1.5 m³ / min	2.1 m³/min (USA +20%)	2.1 m³/min		2.8 m³/min	2.8 m³/min	2.8 m³/min	2.8 m³/min	3.6 m³/min
Cooling system	indirect	indirect	indirect	indirect		indirect	indirect	indirect	indirect	indirect
Fuel consumption (no load - full load)	1-3 l/hour	1-4 l/hour	1-5 l/hr	1-5 l/hr		1-6 l/hr	1-6 l/hr	1-6 l/hr	1-6 l/hr	1-10 l/hr
Starter battery charge current	12 V / 40 A	12 V / 40 A	12 V / 40 A	12 V / 40 Av		12 V / 40 A	12 V / 40 A	12 V / 40 A	12 V / 40 A	12 V / 60 A
DIMENSIONS & WEIGHT										
Length × width × height (cabinet)	1060 x 575 x 640	1160 x 680 x 700	1160 × 680 × 700 mm	1260 × 680 × 700 mm		1260 × 680 × 800 mm	1550 × 749 × 805 mm	1550 × 749 × 805 mm	1550 × 749 × 805 mm	1625 x 925 x 760
Dry weight	334 kg	390 kg	454 kg	454 kg		580 kg	640 kg	640 kg	640 kg	879 kg
Dry exhaust / wet exhaust	Ø 1.5 inch BSP / Ø 51 mm	Ø 1.5 inch BSP / Ø 51 mm	Ø 1½ inch BSP / Ø 51 mm	Ø 1½ inch BSP / Ø 51 mm		Ø 2 inch BSP / Ø 63 mm	Ø 2 inch BSP / Ø 63 mm	Ø 2 inch BSP / Ø 63 mm	Ø 2 inch BSP / Ø 63 mm	Ø 2 inch BSP / Ø 63 mm
Oil dipstick			top & side	top & side		top & side	top & side	top & side	top & side	top & side
Max. operating angle	25º in all directions	25º in all directions	25º in all directions	25º in all directions		25º in all directions	25º in all directions	25º in all directions	25º in all directions	25º in all directions
CONTROL PANEL										
Standard	Deepsea controller	Deepsea controller	DDC	Deepsea controller		Deepsea controller	Deepsea controller	DDC	Deepsea controller	Deapsea Controller
Optional	WP-Touch full colour panel 7”	WP-Touch full colour panel 7”	WP-Touch full colour panel 7”	WP-Touch full colour panel 7”						

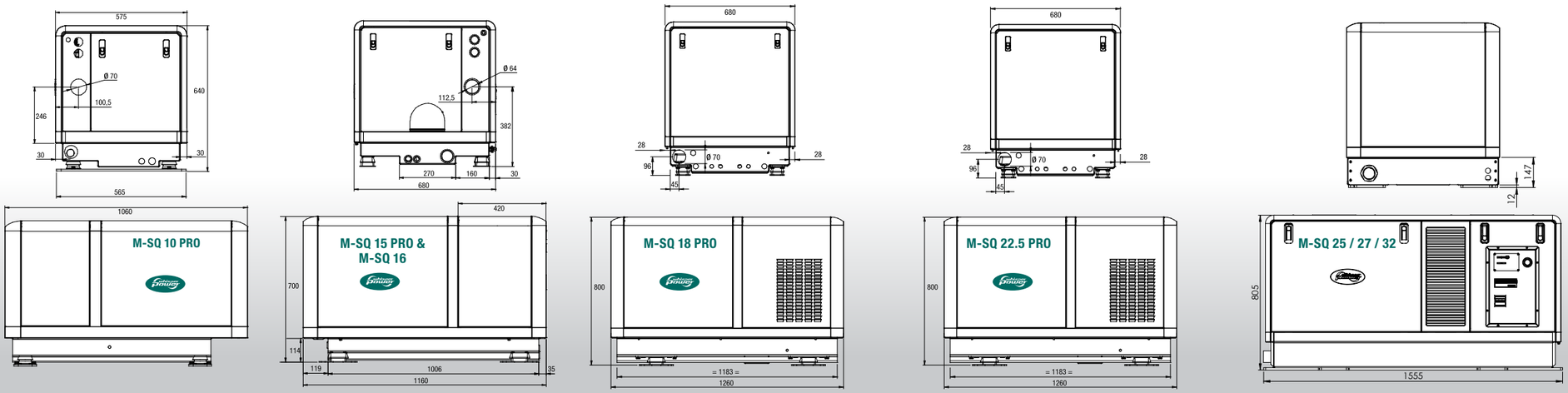

CCR II

Enclosure sizes are preliminary, excluding our M-SQ 16 and M-SQ25/27/32, they are final.

What a complete
generator system looks like

This page provides an overview of all the essential installation equipment for a generator system. We recommend only using original WhisperPower parts. We provide installation kits for all of our generator models to facilitate installation. All products are high quality and specifically designed for the intended function.

Marine
installation example

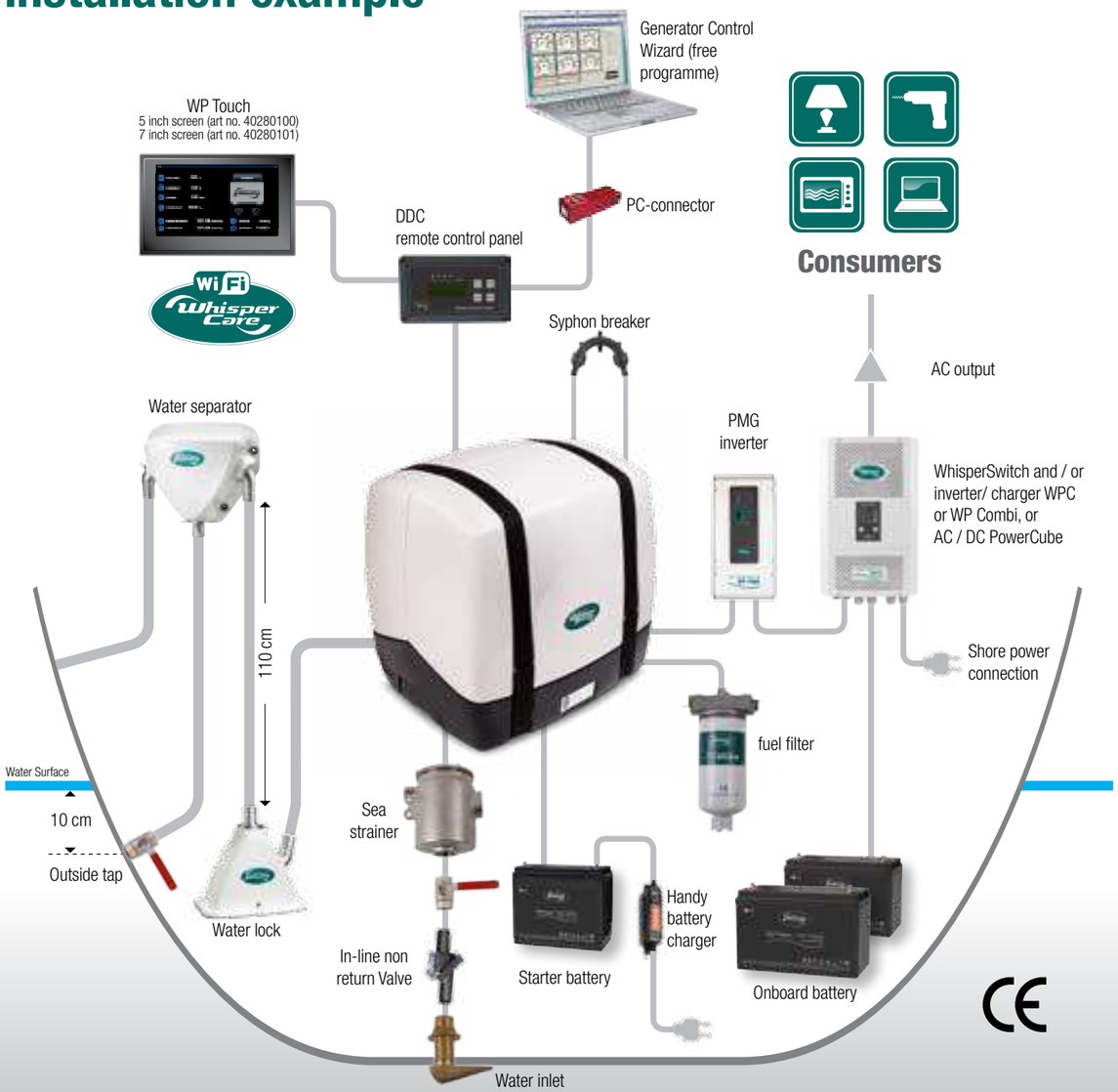

Delta Exhaust Systems
for a safe and quiet system

Pairing your generator with our DELTA exhaust system adds a fit for purpose and professional finishing touch in much the same way that the WhisperPower installation kits ensure correct and professional installation. They have been specifically designed for our WhisperPower generators to manage engine noise and separate exhaust gas from the cooling water. Our exhaust kits are composed as follows:

- The Delta silencers / water locks are designed for engines and generators positioned below the waterline. They protect the engine against the return flow of cooling water. An important additional feature is the noise reduction of the engine
- The Delta water / gas separator is designed to remove the exhaust fumes from the cooling water via two outlets: one above the waterline for fumes and one to discharge the cooling water. As a result, there is a considerable reduction in exhaust noise with no splash noise
- The Delta exhaust components are made from fire proof GRP and fully comply with ABYC regulations
- The kits include hoses (certified to ISO 13363/ marine use), heavy duty hose clamps, seacocks and through-hull fittings

Delta Water / Gas Separator
Available as a complete kit with hoses, seacocks and through-hull fittings or as separate silencer / water lock.

Delta Silencer / Water lock
Available as a complete kit or as separate silencer / water lock in three sizes. Suitable for all engines or standard generators from 3kW - 30 kW

Also available as a “Budget” kit (WP-WL/WP-WGS)

Delta Water / Gas Separator

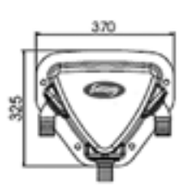

Delta 40/51mm

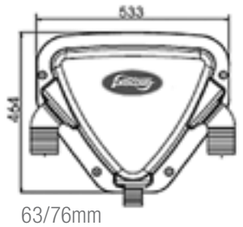

63/76mm

Delta Silencer / Water lock

Delta 40/51mm

63/76mm

Water inlet kits

The water inlet kit for marine generators includes a seacock, water strainer, valve and installation material.

	WATER INLET KITS
Art.no.	**Model**
40230201	Water inlet kit 12.5 mm (1/2")*
40230211	Water inlet kit 20 mm (3/4")*
40230221	Water inlet kit 25 mm (1")*

* Kits with plastic thru-hull for aluminium or carbon hull available at request

Syphon breaker kits

A syphon breaker prevents water from being syphoned backward.

	SYPHON BREAKER KITS
Art.no.	**Model**
40230272	Syphon breaker kit 12.5 mm (1/2")
40230273	Syphon breaker kit 20 mm (3/4")
40230274	Syphon breaker kit 25 mm (1")

Battery cables & hoses

We can provide our inverters and combi's with pre-wired battery cables.
Our high quality marine grade DC cables ar also available per required lenght. The cable connections and cable eyes can be pre-mounted.

	BATTERY CABLES	
Art.no.	**Model**	
50213070	Battery cable red	16 mm2 (roll 50 m)
50213071	Battery cable black	16 mm2 (roll 50 m)
50213075	Battery cable red	25 mm2 (roll 25 m)
50213076	Battery cable black	25 mm2 (roll 25 m)
50213085	Battery cable red	35 mm2 (roll 25 m)
50213086	Battery cable black	35 mm2 (roll 25 m)

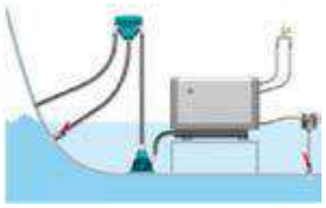

Complete installation with Delta silencer / water lock and Delta gas / water separator

	DELTA EXHAUST PARTS (POLYESTER)	
Art.no.	**Model *)**	
40230251	DELTA Exhaust kit 40 mm (1 5/8")**	
40230252	DELTA Exhaust kit 51 mm (2")**	
40230254	DELTA Exhaust kit 63 mm (2 1/2")**	
40230093	DELTA Exhaust silencer / water lock	40 mm
40230094	DELTA Exhaust silencer / water lock	51 mm
40230190	DELTA Exhaust silencer / water lock L 51	16 litre
40230191	DELTA Exhaust silencer / water lock L 63	16 litre
40230192	DELTA Exhaust silencer / water lock L 76	16 litre
40230261	DELTA Water-gas separator kit (1 5/8")**	40 mm
40230262	DELTA Water-gas separator kit (2')**	51 mm
40230264	DELTA Water-gas separator kit (2 1/2")**	63 mm
40230097	DELTA Water/ gas separator	40 mm
40230098	DELTA Water/gas separator	51 mm
40230193	DELTA Water/gas separator L 51	16 litre
40230194	DELTA Water/gas separator L 63	16 litre
40230195	DELTA Water/gas separator L 76	16 litre

*) In conformity with ABYC Standards

** Kits with plastic thru-hull for aluminium or carbon hull available at request

	WHISPER POWER WATERLOCK/GAS SEPARATOR (PLASTIC)	
Art.no.	**Model**	
40230281	WP-WL Water lock exhaust kit (1 5/8")*	40 mm
40230282	WP-WL Water lock exhaust kit (2")*	51 mm
40230291	WP-WGS 40/40/40 Water/Gas seperator kit (1 5/8")*	40 mm
40230292	WP-WGS 40/40/40 Water/Gas seperator kit (2")*	51 mm

* Kits with plastic thru-hull for aluminium or carbon hull available at request

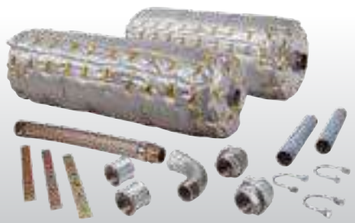

	DRY EXHAUST KIT - KEEL COOLING
Art.no.	**Model**
40201325	Dry exhaust kit 1" for Genverter up to M-GV 15
40201875	Dry exhaust kit 1 1/2" for M-SQ 8 / 9.5 / 10 / 11 / 12 / 15 / 16 / 20
40201889	Dry exhaust kit 2" for M-SQ 27 / 32 / 50

Box cooler kit

A specially designed cooler that is often used in the hull of steel ships is called a “box- cooler” and is available as a WhisperPower installation kit.

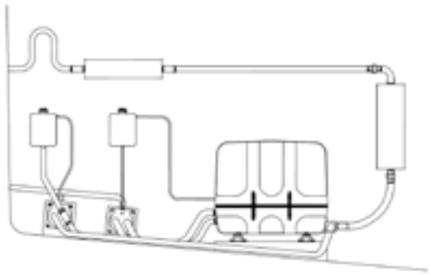

	BOX COOLER KIT
Art.no.	**Model**
40201303	Box cooler kit up to 10 kVA
40201873	Box cooler kit up to 15 kVA
40201874	Box cooler kit up to 20 kVA
40201894	Box cooler kit for M-SQ 27 / 30 and M-SQ 20 - 50 Hz

	MARINE INSTALLATION KITS
Art.no.	**Model**
40230205	Universal fuel supply kit
40230217	Rubber vibration damping kit (shock mounts)
40290106	Starterbattery installationkit < 90Ah
40290108	Starterbattery installationkit ≥ 90Ah

Base plate kit

The base plate kit consits of a base plate, shock mounts and installation material.

	BASE PLATE KIT
Art.no.	**Model**
40230208	Base plate M-GV4 Piccolo
40230209	Base plate Genverter 8/10

Hoses

Flexible and strong. With spirals. Made from EPDM rubber

	HOSES	
Art.no.	**Model**	
50220057	Flexible rubber cooling water hose (1/2”)	13 x 21 mm (roll 20 m)
50220011	Flexible rubber cooling water hose (3/4”)	18 x 26 mm (roll 20 m)
50220012	Flexible rubber cooling water hose (1”)	25 x 34 mm (roll 20 m)
50220013	Flexible rubber cooling water hose (1 1/4”)	32 x 41 mm (roll 20 m)
50220055	Transparent cooling water inlet hose	13 x 19 mm (roll 20 m)
50220056	Transparent cooling water inlet hose	19 x 26 mm (roll 20 m)
50220050	Transparent cooling water inlet hose	25 x 33 mm (roll 20 m)
50220063	Diesel fuel hose	8 x 16 mm (roll 20 m)
50220033	Exhaust hose (1 5/8”)	40 mm Ø (inside diameter)
50220035	Exhaust hose (2”)	51 mm Ø (inside diameter)
50220036	Exhaust hose (2 1/2”)	63 mm Ø (inside diameter)

Service Kits
from WhisperPower

The A-kit contains all the spare parts for those items, such as filters and belts, that should be replaced on a regular basis. We advise always ordering an A-kit along with you new WhisperPower generator. The B-kit consists of parts for those items which may need to be replaced after a longer period of time, depending on the number of operating hours. Our B-kits include a larger number of components such as seals and various mechanical parts. For long trips, it is advisable to take a B-kit with you on board.

SERVICE KITS FOR MARINE USE	
40401170	A-kit M-GV4 Piccolo
40401171	B-kit M-GV4 Piccolo
40401770	A-kit M-GV 2/3, M-GV 8/10 K
40401771	B-kit M-GV 2, M-GV 8 K
40401781	B-kit M-GV 3, M-GV 10 K
40201260	A-kit SC-3.5 - 3000 / 3600rpm
40201860	A-kit M-SC 6 and M-SC 10 - 3000 / 3600rpm
40201861	B-kit M-SC 6 - 3000 / 3600rpm
40201761	B-kit M-SC 10 - 3000 / 3600rpm
40201860	A-kit M-SQ 6 - 1500 / 1800rpm
40201761	B-kit M-SQ 6 - 1500 / 1800rpm
40201460	A-kit M-SQ 8, M-SQ 10 and M-SQ 12 -1500 / 1800rpm
40201653	B-kit M-SQ 8 and M-SQ 10 - 1500 / 1800rpm
40201461	B-kit M-SQ 12 - 1500 / 1800rpm
40201360	A-kit M-SQ 16 - 1500 / 1800rpm
40201361	B-kit M-SQ 16 - 1500 / 1800rpm
40201560	A-kit M-SQ 20 and M-SQ 27 - 1500 / 1800rpm
40201561	B-kit M-SQ 20 and M-SQ 27 - 1500 / 1800rpm

Spare part kit Piccolo / M-GV4

WPL COOLANT AND ENGINE OIL	
40222214	WPL Coolant G12, Coolant, 4 liters
40222241	WPL-15 W40 General, Engine oil, 1 litre
40222244	WPL-15 W40 General, Engine oil, 4 liters
40222224	WPL 10 W40 Premium Long Drain, Engine oil, 4 liters

BOILER KIT - WARM WATER OR HEATING FROM THE GENERATOR	
40245030	Boiler kit for Genverter Range up to 8 kW
40245031	Boiler kit for Gensets up to 10 kW

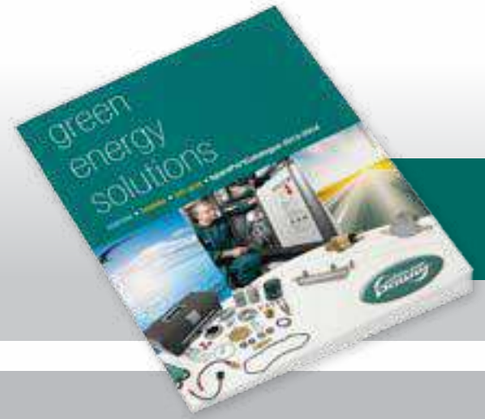

Request our SpareParts catalogue
Available to download from our website or contact the sales department

Using the onboard engine as a generator

DC BeltPower

The propulsion engine of a sailing or motor yacht is, in general, equipped with an average sized alternator designed to charge the starter battery. These type of alternators are not powerful enough to charge the service battery. Furthermore, the charging voltage of the alternator is regulated to maintenance level which is not really conducive to fully and quickly charging an onboard battery. This problem is solved with a WhisperPower BeltPower alternator. We recommend installing the DC BeltPower as a second alternator with the primary function being to charge the onboard battery, or even multiple batteries via our WBI battery isolator.

Features

- Heavy duty 12/24 VDC alternator
- Charge current 75-150 Amps
- High charge current even at low rpm
- ACR© 3-step charge system ensuring fast and complete battery charge
- Automatic charge voltage adjustment to ambient temperature via sensor on battery
- Programmable for GEL, AGM and Lithium-ion batteries
- Complete plug & play
- Brackets available to mount alternator (not included, advice on request)

Benefits

- On average, engine doesn't need to run for longer than an hour to charge batteries
- The ACR voltage regulator ensures batteries are 100% charged
- Thanks to a special way of winding the alternator, there is a high charge current even at low engine speeds
- The standard 12/24 VDC alternator can remain in place - no need to alter the standard engine configuration
- Inverters up to 3kW can be used in combination with the DC PowerBelt (advice on request)
- A smart WhisperPower WBI battery isolator can be used to charge up to 3 individual batteries
- Suitable for every engine type

Suitable to charge lithium ION batteries

3-step charge process

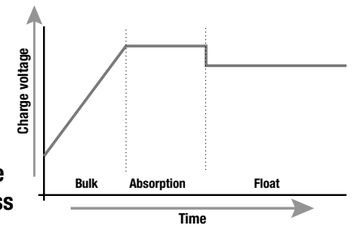

The charging process of the DC PowerBelt is identical to the charging characteristics of the WhisperPower chargers and combi's.

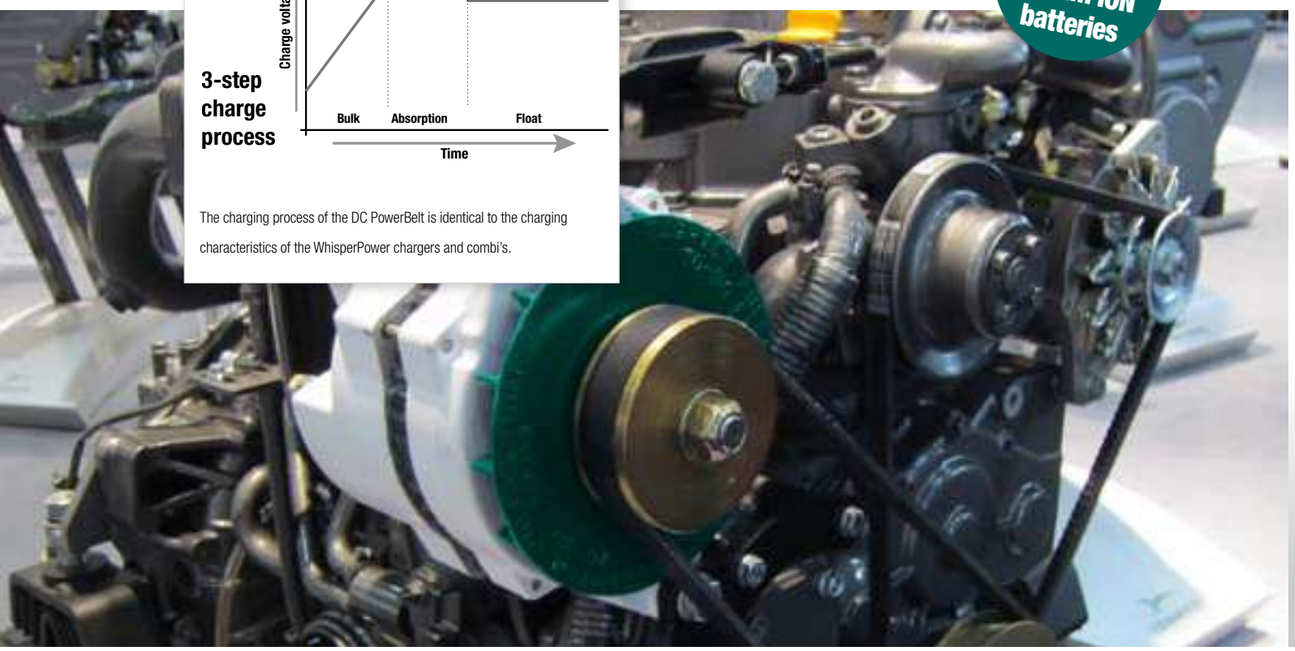

DC BeltPower Technical Data

ART. NR.	60212091	60212131	60212161	60224076	60224111	60224151
Enclosure type	A	B	B	B	B	C
Charge current	90 A	130 A	160 A	75 A	110 A	150 A
Alpha Pro charge regulator	standard	standard	standard	standard	standard	standard
Charge voltage absorption	14.25 V	14.25 V	14.25 V	28.5 V	28.5 V	28.5 V
Charge voltage float	13.25 V	13.25 V	13.25 V	26.5 V	26.5 V	26.5 V
Cable length regulator / alternator	1.5 metre, oil resistant marine connection cable included as standard					
Diameter double pulley	ø 73 mm	ø 88 mm	ø 88 mm	ø 88 mm	ø 88 mm	ø 92 mm
Belt section	2xA	2xA	2xA	2xA	2xA	2xA
Earthed	Yes	Yes	Yes	Yes	Yes	Yes
Turn directions	2	2	2	2	2	2
Weight	5.5 kg	10.1 kg	12 kg	10.1 kg	10.1 kg	13.1 kg
Voltage regulation	WP ACR voltage regulator included as standard with all models					

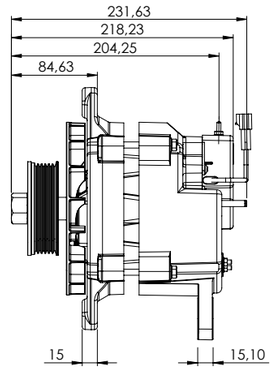

DC BeltPower is available with the following pulleys

PULLEY		
60212001	Pulley Double V 5/8" 73,6 mm	for 12 V-90 A Alternator
60212006	Pulley Flat belt 7/8" 89 mm	for 12 V-130 A; 12 V-160 A; 24 V-75 A; 24 V-110 A; 24 V-150 A Alternator
60212002	Pulley Flat belt 5/8" 73,6 mm	for 12 V-90 A Alternator (optional)
60212005	Pulley Double V 7/8" 89 mm	for 12 V-130 A; 12 V-160 A; 24 V-75 A; 24 V-110 A; 24 V-150 A Alternator (optional)

ACR charge regulator, compatible with Bosch alternator

ALTERNATOR CHARGE REGULATOR		
60115100	WP-ACR 12 V Alternator Charge Regulator	Incl. Temp. Sensor and WP Connect
60115200	WP-ACR 24 V Alternator Charge Regulator	Incl. Temp. Sensor and WP Connect

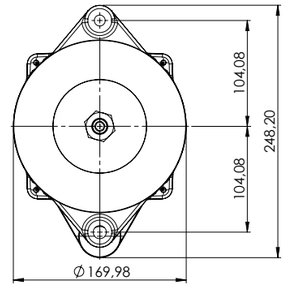

Drawings available on our website

Standard brackets for Volvo Penta Engines – ask your Volvo Penta dealer for more details *)

PARTNR. VOLVO PENTA	PARTNR. WHISPERPOWER		VOLVO PENTA ENGINE MODEL
21268949	60212131	12 V - 130 A	D3
	60224076	24 V - 75 A	
	60224111	24 V - 110 A	
21281679	60224111	24 V - 110 A	D2-55, D2-75

*) Standard brackets for Volvo Penta Engines – ask your Volvo Penta dealer for more details

At picture: fitting of a 2e WhisperPower alternator on a Volvo Penta Diesel engine. Conversion kits of standard 12 V alternator are available from the Volvo Penta dealer. Alternator engine brackets are available as loose parts for D8/D9/D11/D13. A Volvo Penta Dealer should be able to guide you to the correct parts, also for other engine models.

Alternator Charge Regulator (ACR) delivered as complete set including cable harness to fix the ACR on to the alternator and temperature sensor with 6 metres of cable

The system

- DC BeltPower
- ACR charge regulator
- Temperature sensor
- Cable harness

230 VAC directly from the engine

AC BeltPower

If space restrictions make it difficult to install a WhisperPower generator but 230 V / 50 Hz AC power is needed, then our AC BeltPower might be the solution. Both a 3.5 kVA and a 5 kVA version of this 'engine driven' generator are available. The system consists of a compact alternator and inverter box which convert the alternator power in to pure 230 V 50 Hz sine wave power. This can be used to operate small air conditioning units, tools, pumps etc. For practicality, why not also install the WPC inverter charger as an extension of the AC BeltPower system to charge the auxiliary battery and provide silent power after the engine has been switched off!

Features

- 3.5 kVA and 5 kVA models
- Extremely compact solution
- Alternator and inverter connected via plug and play cable harness
- Pure sine wave power output with high peak power
- Sufficient output even at low rpm
- WPC PowerCentre can run in parallel with AC BeltPower to provide even more powerful output
- Seamless switching from WPC inverter to AC BeltPower and vice versa
- Mounting brackets available subject to engine type. Ask your WhisperPower installer or engine supplier for more details

Benefits

- AC BeltPower eliminates need for small auxiliary generator
- Extra engine not required - one engine for everything: propulsion and electricity
- Pure sine wave power to operate all AC equipment
- Can be combined with WPC Combi / battery charger inverter

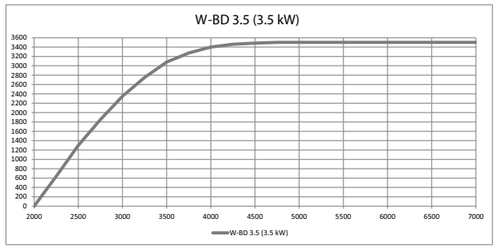

Speed/power diagram W-BD 3.5 (3.5kW)

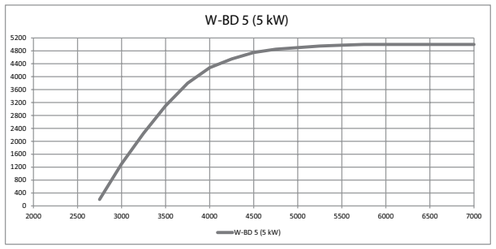

Speed/power diagram W-BD 5 (5kW)

Remote control panel for BeltPower with adjustable settings

An essential component of the AC and DC BeltPower system is the bracket for mounting the alternator to the engine. Mounting bracket kits are available on the market for numerous engine brands, including Volvo Penta.

If required, WhisperPower can assist by selecting the correct pulley - there is a choice of a double or multi belt.

Combined AC BeltPower and battery charger / inverter system

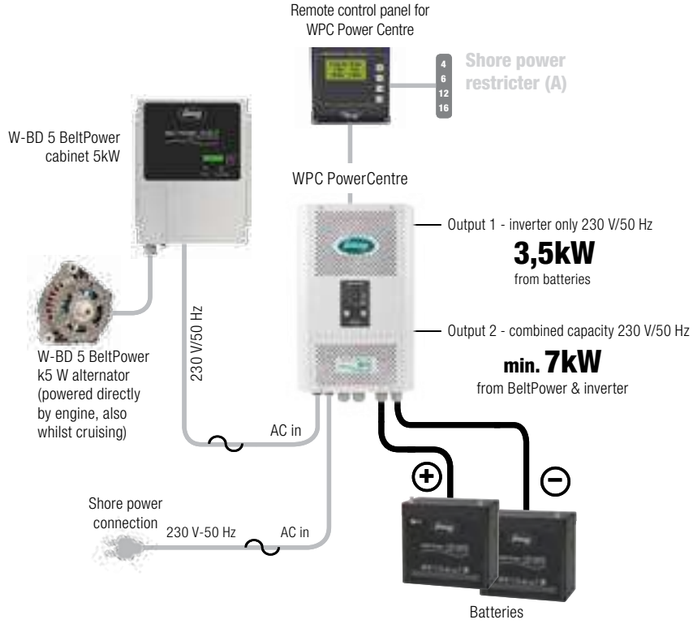

Specifications

BELTPOWER ARTICLE NR.	41301000	41302000
SPECIFICATIONS	**W-BD 3.5**	**W-BD 5**
Power (continuous)	3500 W	5000 W
Max. power (continuous)	16 A	27A
Max. starting power (320 ms)	32 A	85 A
Voltage	230 V	230 V
Frequency	50 Hz	50 Hz
INVERTER		
Dimensions (h*b*d)	376*323*127 mm (app.)	
Weight Power Box	9.6 Kg	9.6 Kg
Efficiency	95%	95%
GENERATOR		
Weight	6.9 Kg	6.9 Kg
Dimensions (h*w*d)	159*178*190 mm	
Voltage	200-340 V 3-Phase	
Field voltage	14.4 V	14.4 V
REMOTE CONTROL PANEL		
Dimensions (h*w*d)	116*79*19 mm	

Technical Data

AC BELTPOWER - 230 V GENERATOR SYSTEM - BELT DRIVEN VIA THE MAIN ENGINE		
41301000	**WP-AC BELTPOWER 3.5** 3.5kW (at maximum rpms),	32 A inrush current
41302000	**WP-AC BELTPOWER 5.0** 5.0 kW (at maximum rpms),	85 A inrush current
REMOTE CONTROL PANEL		
41301030	Remote control panel	
ACCESSORIES		
41301020	Shielded power cable	5 m
41301021	Shielded power cable	8 m
41301022	Shielded power cable	10 m
41301025	Remote control panel cable	5 m
41301026	Remote control panel cable	10 m
50209133	Remote control panel cable	15 m
STANDARD PULLEYS AND PULLEYS TO SPECIFICATION		
41301050	Pulley - poly 6 groove	Ø 60 mm (recommended)
41301051	Pulley - poly 6 groove	Ø 50 mm
41301052	Pulley - Double V groove 12.7 mm	Ø 70 mm
41301053	Pulley - Double V groove 10 mm	Ø 60 mm

Installation drawing W-BD-generator

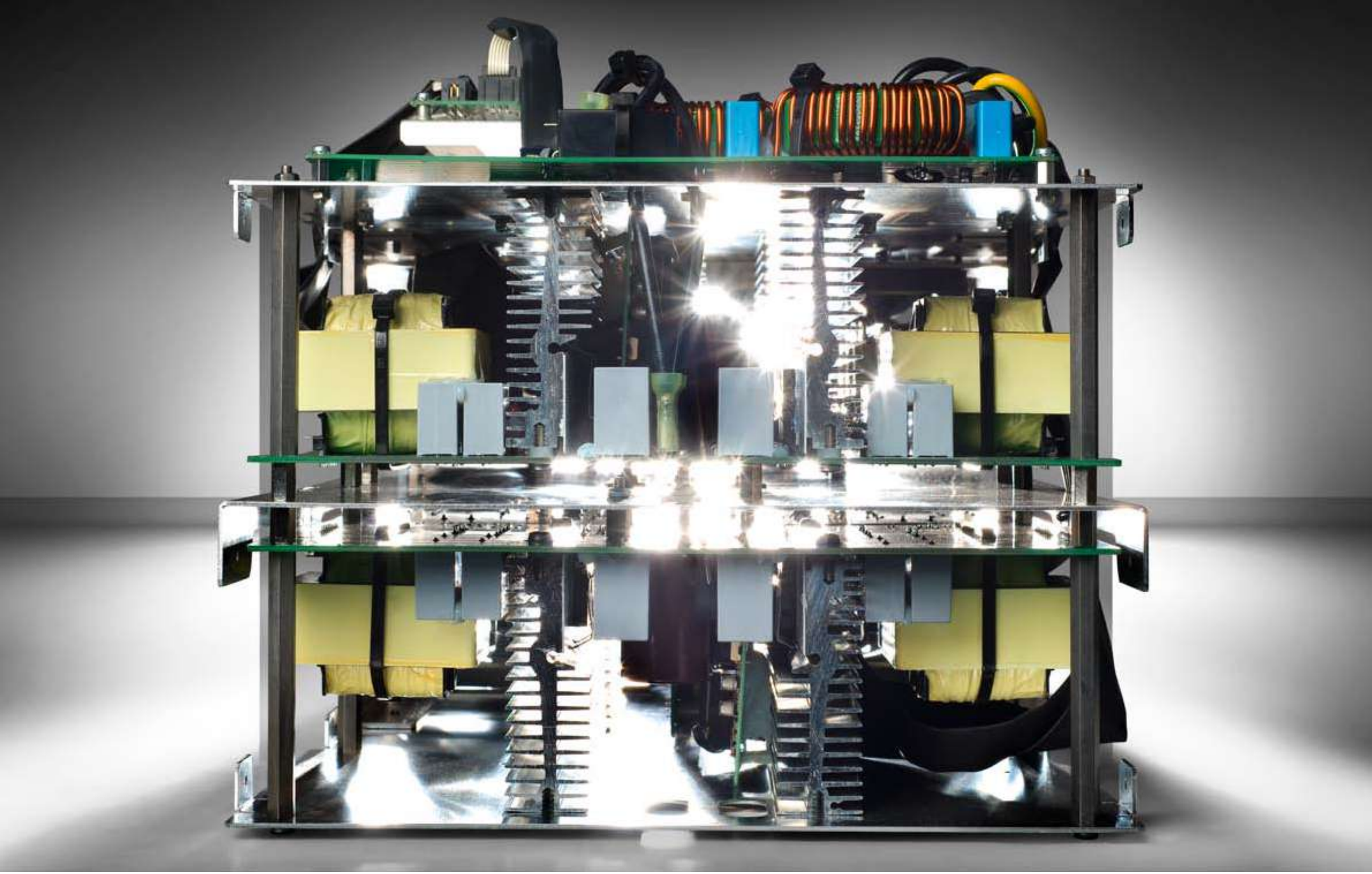

Converting Power

Inverters, battery chargers
and combi's

Having introduced our systems in the first part of this catalogue, we will now take a closer look at the products and components that you can choose from to tailor make your own system. Power electronics is the key to creating a quiet, intelligent, energy-efficient and environmentally friendly energy system. The vast majority of these products has been developed in recent years by WhisperPower with the main goal of a perfect integration of the power electronics with the power generation and power storage products.

Battery Chargers

The most important function of a battery charger is to charge the battery/ batteries whilst the vessel is connected to shore power.

- WhisperPower's battery chargers convert any AC voltage or frequency to a smooth 12, 24 or 48 VDC.
- WhisperPower battery chargers ensure fast and complete charge of the batteries.

The result: the batteries last for longer.

The range

Our range consists of our convenient Handy series, and the Supreme Pro series for simultaneous charging of multiple batteries and our heavy duty DC PowerCube series. See page 84-86.

Inverters

WhisperPower's sine wave inverters convert 12 or 24 V battery voltage into exactly the same mains voltage you receive at home. Low power appliances such as vacuum cleaners, computers, phone and tablet chargers do not require a diesel or gasoline generator but can instead be operated by an inverter. With an inverter, any AC Power appliance can be used at any time, without the need of a running generator. WhisperPower inverters are often used in combination with a DC BeltPower alternator, connected to the main engine. See page 52-53.

Charger / inverter combinations

When inverters are combined with a battery charger and transfer relay all in one box, we use the term Combi's. WhisperPower's Combi are compact, space saving, robust and extremely powerful. Three versions are available: our Supreme Combi (light weight, switched mode technology), our WP Combi (with highly efficient toroidal transformers for high peak loads) and WPC 'system combi' with multiple in / outputs.
See pages 72-73.

Excelent electronics

Not so long ago, diesel or gasoline generators were the the only option when it came to having AC Power available whilst sailing without access to shore power. Thanks to the advent of sine wave inverters and combi's, generators have become much more efficient.

- Inverters are used to deliver alternating current during periods of low power consumption
- Generators are used during peak hours
- That can yield fuel savings of 30%
- Drastic reduction in audible noise level (inside and outside the vessel) by setting 'quiet periods' in which the generator is not running
- Fewer operating hours = less maintenance
- Inverters with integrated battery charger (combi) or DC PowerCube also recharge the battery

Smaller generators by 'Peak shaving'

The capacity of a WhisperPower generator and a WPC Power Centre can be connected to increase the system's output. This is a unique and extremely useful feature of our systems. A much smaller generator can be selected (about 20% smaller than usual) as the inverter receives the extra power required from the battery. This so-called 'peak shaving effect' generates vastly improved system efficiency.

24 hours on the go - quiet periods and generator operation

The diagram below shows how the power consumption varies during a 24 hour period. The inverter feeds the various AC devices during periods of low energy consumption in the afternoon, evening and night. In the morning and at the start of the evening, the generator provides the required power whilst simultaneously charging the battery. A truly smart, hybrid energy system.

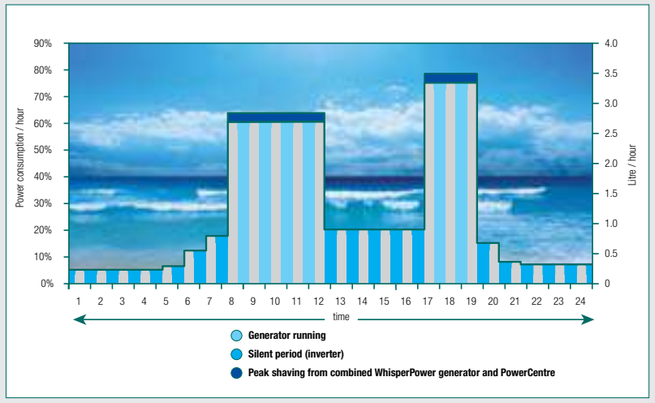

Sine Wave Inverters

WP- Sine Series **up to 3 kVA**

WP-Sine inverters provide yacht owners with a whole host of possibilities to use all kinds of household appliances on board - coffee makers, microwave ovens, TVs, just name it! WhisperPower sine wave inverters are perfectly silent 'generators' which supply AC Power from the battery. These modern inverters, from the WP-Sine series, are compact, light, robust and with high efficiency. They are easy to self-install and do not require maintenance. They are an ideal addition to existing installations which already include a battery charger.

WORLD BEST CLASS POWER • BEST BUY! • FROM WHISPERPOWER

Specifications

- Choice of 400 W, 500 W, 1000 W, 2000 W and 3000 W models
- Can be connected to the 12 V (24 V) battery
- Plug & Play: AC socket and DC connectors
- Negligible loss during conversion from battery to alternating current
- USB connector on front to charge telephone etc (separate charger not necessary)
- 200% peak power
- Remote operation possible, status LEDs on front (DC and AC info)

Benefits

- Pure sine wave power output, stable frequency
- Also suitable for sensitive devices
- Remarkably compact and lightweight
- Simple to install
- Silent
- Robust, protected against overheating, over-use, short circuit
- Outstanding price-performance ratio

	WP-SINE-12/400	WP-SINE-12/1000	WP-SINE-12/2000	WP-SINE-12/3000	WP-SINE-24/500	WP-SINE-24/2000
Article Nr.	61120510	61121500	61122500	61123500 NEW!	61140500	61142500
AC OUTPUT						
Power (continuous)	400 W	1000 W	2000 W	3000 W	500 W	2000 W
Power (peak 500ms)	800 W	2000 W	4000 W	6000 W	1000 W	4000 W
Output Voltage	230 V	230 V*	230 V	230 V	230 V*	230 V
Output frequency	50 Hz	50 Hz	50 Hz	50 Hz	50 Hz	50 Hz
Transfer switch	No	No	No	Yes	No	No
Total harmonic distortion (THD)	<5% pure sine wave	<5% pure sine wave	<5% pure sine wave	<5% pure sine wave	<5% pure sine wave	<5% reiner Sinus
DC INPUT						
Nominal battery voltage	12 V	12 V	12 V	12 V	24 V	24 V
Voltage range	10.5 - 15.5 VDC	10.5 - 15.5 VDC	10.5 - 15.5 VDC	10.5 - 15.5 VDC	21 - 31 VDC	21 - 31 VDC
Input power	40 A	94 A	187 A	270 A	23 A	93.5 A
Consumption (no load)	0.4 A base	0.8 A base	1.6 A base	1.6 A base	0.4 A base	1.6 A typical
DC OUTPUT						
5 V USB Phone charger	750 mA	750 mA	750 mA	750 mA	750 mA	750 mA
DISPLAY						
LED indicator	No	Yes	Yes	No	Yes	Yes
Digital display	Input voltage / current, output power					
PROTECTION AND FEATURES						
Warning low input voltage	11.0 VDC	11.0 VDC	11.0 VDC	11.0 VDC	22.4 VDC	22.4 VDC
Shutdown low battery voltage	10.5 VDC	10.5 VDC	10.5 VDC	21.0 VDC	21.0 VDC	21.0 VDC
Recovery after low battery voltage	12.0 VDC	12.0 VDC	12.0 VDC	12.0 VDC	23.6 VDC	23.6 VDC
Shutdown battery voltage too high	15.5 VDC	15.5 VDC	15.5 VDC	31.0 VDC	31.0 VDC	31.0 VDC
Warning too much power	Yes	Yes	Yes	Yes	Yes	Yes
Shutdown too much power	Yes	Yes	Yes	Yes	Yes	Yes
Short circuit too much power	Yes	Yes	Yes	Yes	Yes	Yes
Temperature warning	Yes	Yes	Yes	Yes	Yes	Yes
Thermal protection (shutdown)	Yes	Yes	Yes	Yes	Yes	Yes
Conforms to	EC Council Directive 2004/108/EC Electromagnetic Compatibility Registration No:NTC 1310 406E & E-marking					
Operating temperature range	-20 - 55°C (derating above 40 ° C)					
Relative humidity in operation	95%, non-condensing					
Ventilation	Forced Cooling					
Dimensions LxWxH [mm]	175 × 200 × 89	175 × 323,7 × 90	230 × 416 × 115	539 × 230 × 114	175 × 220 × 82	230 × 416 × 112
Weight	1,7 kg	2,9 kg	5,5 kg	6,9 kg	1,7 kg	5,2 kg
Battery connector	Threaded M6 screw		Threaded M8 screw		Threaded M6 screw	
Earth terminal	Threaded M6 screw		Threaded M6 screw		Threaded M6 screw	
AC-output	1 Schuko socket	1 Schuko socket	2 Schuko sockets	1 Schuko socket	1 Schuko socket	2 Schuko sockets
Warranty	2 years	2 years	2 years	2 years	2 years	2 years

WP Sine Accessories

Article Nr.	Article
61121510	WP-Sine Remote on/off switch with 6 meter cable
61121511	WP-Sine 12/1000 1.5 m battery cable
61121512	WP-Sine 12/2000 1.5 m battery cable

Available with different plug sockets

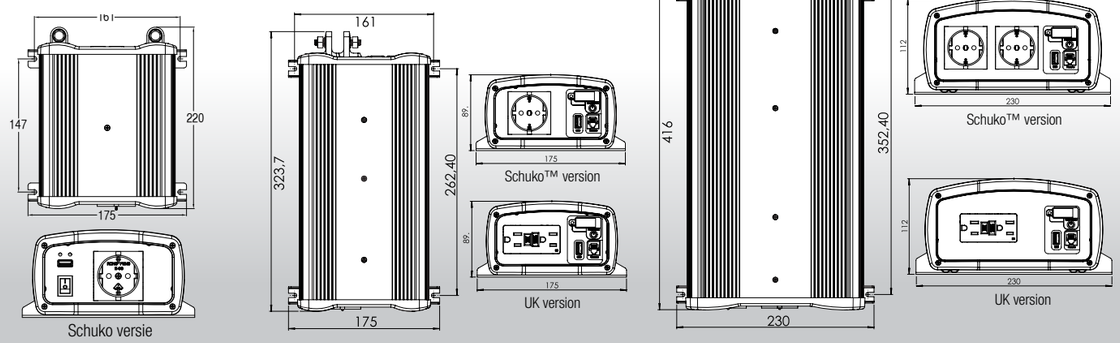

Power electronics

Sine Wave Inverters and Combi's

With roots in the inverter industry going back over 30 years, WhisperPower is one of the world leading companies in the development of sine wave inverters and sine wave inverter/ battery charger combinations. We offer a wide choice from semi industrial low power inverters up to heavy duty high power inverters. See description below.

Heavy duty inverters
Our AC PowerCube sine wave inverter is an extremely powerful and robust device, designed to convert 230 V AC power from a 24 VDC battery bank. There are four models: with 3.5 kVA , 7 kVA and 14 kVA output power and single phase 230 V output (50 or 60 Hz). We also offer a 10 kVA 3-phase version. For our single phase models, switched mode technology has been applied, resulting in an extremely efficient and "cool running" device.

Combi inverter / battery charger
We offer three different technologies: for semi professional use we supply our Supreme Combi models, a bi-directional sine wave inverter which will charge the battery when AC power is available and will switch to inverter mode when AC power is disconnec-ted. Power rating up to 2 kW, switched mode technology applied. For professional use we offer our transformer based WP Combi's (2-3 kVA power, also usable for inverter-only use) and the full function WhisperPower Centres (up to 27 kVA) which can be used in parallel with other WhisperPowerCentres and WhisperPower generators.

Low power inverters for semi industrial applications
As a part of our Orange range of products for semi industrial use, we supply easy-to-install light weight inverters providing a perfect sine wave output. These models are fitted with external connection for the battery and have AC outlet sockets for immediate use. Ideal devices for decentralized power solutions on board of small vessels such as heating systems, fridges/ freezers, computers etc.

Article Nr.	Sine Wave Inverters
60203003	AC-PowerCube 24/4000 - 4 kVA, 230 V, 50 Hz
60203004	AC-PowerCube 24/7000 - 7 kVA, 230 V, 50 Hz
60203005	AC-PowerCube 24/14000 - 14 kVA, 230 V, 50 Hz
60203010	AC PowerCube 24/10000 - 10 kVA, 3-ph, 50 Hz

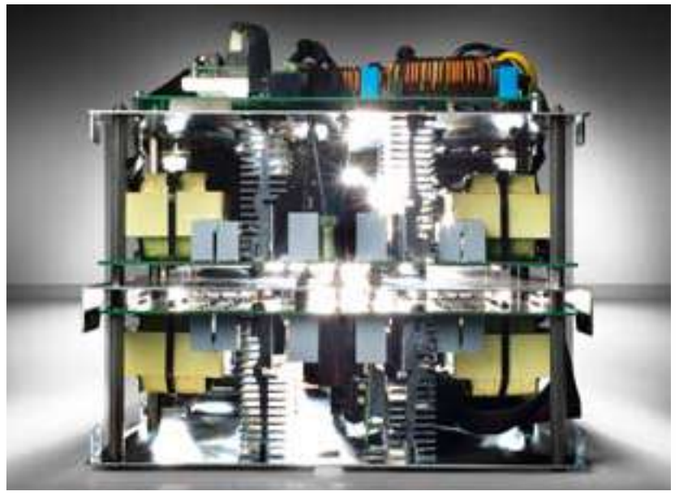

Built-in redundancy
Our AC PowerCube inverters feature built-in redundancy. We work with power modules of 3.5 kW each, which operate in parallel. When one power module fails, the inverter will continue to supply power.

Professional package
Robuste aluminium enclosure with heavy duty, multiple battery DC connections. Inside electronics is protected against moisture and salty influences by conformal coating

No harm to batteries
As a result of our unique V6 and V12 switched mode technology, no voltage ripple is returned tot he DC battery terminals. This ripple effect is reducing battery life time and is causing fluctuations in the DC net (flickering lights for example).

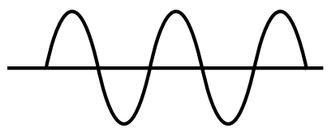

Perfect sine wave
Lowest harmonic distortion under all load circumstances and perfect sine wave. Stable AC output voltage and frequency (quarz controlled)

Connectivity
Analogue remote controls and cables supplied as standard, digital TOUCH panels optional. WhisperConnect Can Bus connection for interconnection with other devices and USB interface eventual uploads. Laptop programmable.

- External command (Phoenix MSTBA2/4-G-5.08)
- WP-RCP remote control panel, to be connected by RJ12 connector plus cable, for extended LED information and on/off remote switch. Supplied as standard
- WhisperConnect CAN-Bus RJ45 port for integration to the System bus
- USB Type 2 port, can be used to set output parameters

Running cool & no buzzing
Highly efficient switched mode technology applied for our inverter-only products. AC PowerCubes are fitted with temperature controlled silent running fans

Multiple battery connections
AC PowerCubes can be connected to 2 separate batteries, which allows to take a lot of current at the same time from batteries which are stored in different locations

Sine Wave Inverters

AC PowerCube **High lighted**

The AC PowerCube is a professional inverter suitable for continuous operation even under extreme conditions. There are four models: a 4 kVA model, a 7 kVA consisting of two 3.5kW power modules (built into one enclosure) connected in parallel and providing each other with backup. The 14 kVA model is made up of four 3.5kW modules which are redundantly switched. The fourth model is a 10 kVA three phase inverter, build into one enclosure. The AC PowerCubes make it possible to switch off the diesel generator for longer periods time and provide the entire onboard installation with power including, for example, air conditioning, kitchen and refrigeration equipment. As a result, there is less fuel consumption, less noise disruption and less running hours for the generator.

Features

- Industrial electronics based on high frequency switched mode technology
- As a result, high efficiency (>92%) and a minimum of powerloss
- No ripple effect from AC to battery, with as a result, a stable DC network.
- No buzz or humming, super quiet
- Fan cooled, resistant to high ambient temperatures
- Double DC connectors 2 x plus, 2 x minus, can be connected to two battery banks
- Perfect for insertion in a complete WhisperPower system

Benefits

- Uncompromised design: purely as inverter
- Direct power supply, no interruptions, battery as buffer
- Great high efficiency = minimal cooling required (cool running)
- Perfect to combine with DC PowerCube and Genverter©
- Significant cost savings from reduced fuel consumption
- Quiet and environmentally friendly
- Simple to integrate in WhisperPower Hybrid energy system

Connection compartment of the AC PowerCube 7 kVA. On the right, double battery connector with 2 x DC PLUS and 2 x DC MINUS connections - one or two separate battery banks can be connected. On the left, the 230 V / 50 Hz output and the connection for the remote control panel and the various set up ports.

	AC POWERCUBE 24/4000	AC POWERCUBE 24/7000	AC POWERCUBE 24/14000	AC POWERCUBE 24/10000
Article Nr.	60203003	60203006	60203005	60203010
GENERAL				
Nominal output voltage	230 V (± 5%), Phase, Neutral, Earth *)	230 V (± 5%), Phase, Neutral, Earth *)	230 V (± 5%), Phase, Neutral, Earth *)	3 x 380 V (± 2%), Phase, Neutral, Earth *)
Nominal output frequency (adjustable to 60 HZ)	50 Hz (± 0,01Hz)	50 Hz (± 0,01Hz)	50 Hz (± 0,01Hz)	50 Hz (± 0,05%)
Nominal battery voltage	24 VDC	24 VDC	24 VDC	24 VDC
Nominal power P30 (cos phi = 1) (30 min at 40°C)	4000 W	7500 W	14000 W	10000 W
Peak power (20 s)	7000 W	15000 W	28000 W	30000 W
Continuous power (cos phi = 1) (40°C)	3000 W	6000 W	12000 W	9000 W
AC connection (output)	Internal terminal block, screw terminal (4 .. 6mm2)			
DC connection	2 × M10	4 × M10	4 × M10 (2 per battery bank)	2 × M10
Minimum capacity of battery bank	260 Ah	600 Ah	800 Ah	800 Ah
Efficiency	> 85%	> 85%	> 85%	> 90%
Peak efficiency	> 92%	> 92%	> 92%	> 92%
Dimensions (bxdxh - mm)	195 × 316 × 575	310 × 316 × 575	618 × 316 × 575	664 × 316 × 575
Weight	13kg	18kg	40kg	60kg
Noise level (at 1m)	< 48dBA	< 48dBA	< 48dBA	< 48dBA
Operation	Power switch (on / off / remote), the DC inputs (on / off), Remote panel switch (On / Off) *			
Indicators	AC present, DC 1 present, DC (1) load, DC 2 present, DC (2) load, AC current, AC voltage			
Safety	Short circuit, overload, overheating, battery voltage too low / high			
TECHNICAL SPECIFICATIONS				
Technology	Six-step multiphase flyback, Switched mode technology			Toroidal transformer
Low battery switch off	20 V (± 0.5 V)	19 V (± 0.5 V)	19 V (± 0.5 V)	19 V (± 0.5 V)
Low battery switch on	22 V (± 0.5 V)	22 V (± 0.5 V)	22 V (± 0.5 V)	22 V (± 0.5 V)
High battery switch off	32 V (± 0.5 V)	32 V (± 0.5 V)	32 V (± 0.5 V)	32 V (± 0.5 V)
High battery switch on	30 V (± 0.5 V)	30 V (± 0.5 V)	30 V (± 0.5 V)	30 V (± 0.5 V)
Maximum ripple on DC (battery)	5% RMS	5% RMS	5% RMS	< 5% RMS
Input current (nominal load)	200 A	2 × 200 A	4 × 200 A	800 A
Consumption (no load)	< 300 mA, 6W	< 550 mA, 12 W	< 2 x 550 mA, 24W	1.6W, standby
Total harmonic distortion (THD)	< 5% (normal)	< 5% (normal)	< 5% (normal)	< 2% (normal)
Allowable power factor	0 < cos phi < 1	0 < cos phi < 1	0 < cos phi < 1	0 < cos phi < 1
CONDITIONS				
Ambient operating temperature	-20°C .. 40°C	-20°C .. 40°C	-20°C .. 40°C	-20°C .. 40°C
Storage temperature	-25°C .. 80°C (derating above 40 °C)	-25°C .. 80°C (derating above 40 °C)	-25°C .. 80°C (derating above 40 °C)	-25°C .. 80°C (derating above 40 °C)
Relative humidity	Max 95%, non-condensing	Max 95%, non-condensing	Max 95%, non-condensing	Max 95%, non-condensing
International Protection rating	IP23	IP23	IP23	IP23
Cooling	Natural / forced			
CONFORMITY				
EU Directive	EMC Directive 2004/108 / EC, EMC 2004/104 / EC (automotive), Low Voltage Directive 2006/95 / EC			
Standards	EN 55022 (emission) EN 61000-3-2 (harmonic distortion), EN 61000-4-11, EN 61000-3-3 (voltage variations), EN 61000-6-2 (immunity) and EN 60950-1 (safety) AND 68-2-6 (vibration), EN 60945 (navigation and radio communications), UL 458			

*) Ask for our 120 V / 60 Hz models

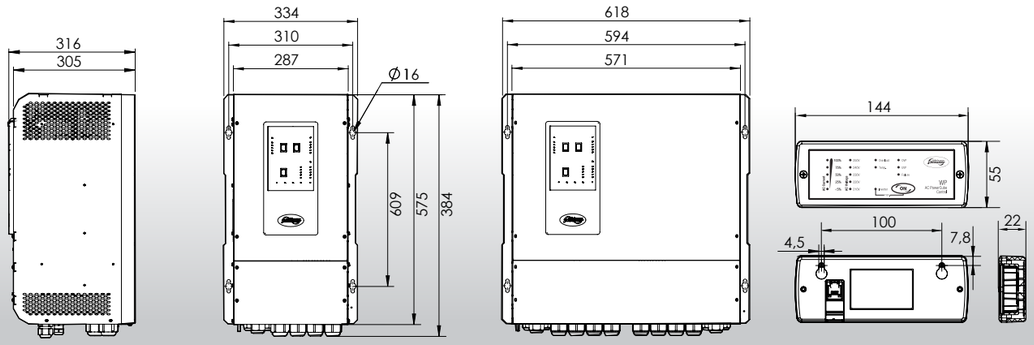

Side view 24/7000, 24/14000 | Front view 24/4000, 24/7000 | Front view 24/14000, 24/10000. 3 ph | Front, rear, side view remote panel

Unit dimension details available at www.whisperpower.com

A fresh look
at power on board

The addition of the WhisperPower AC / DC PowerCube system alongside the Genverter© and the ION Power Plus Lithium battery, or even our standard lead acid battery means that ultimate comfort is now reality.

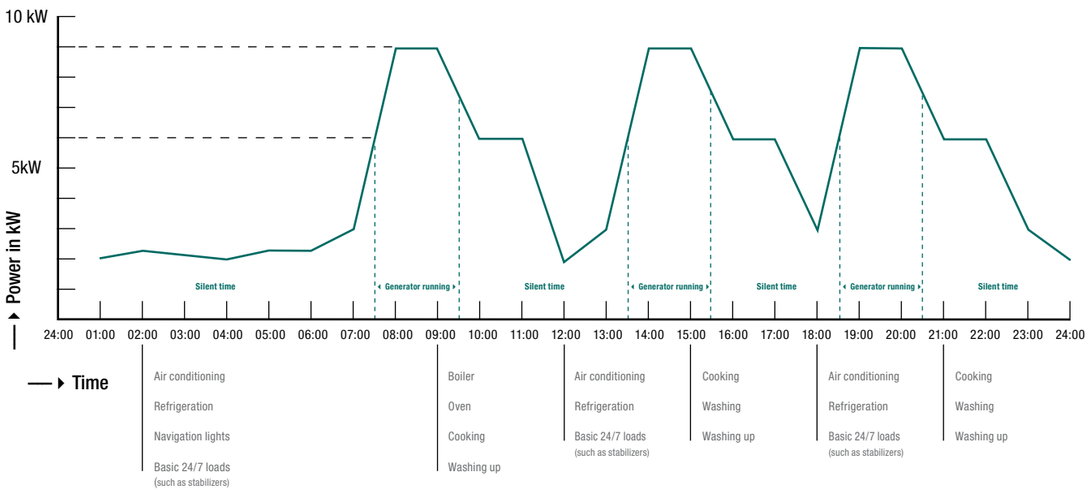

Nothing is as annoying as a noisy and vibrating generator running all day and night. Not pleasant for the neighbors and also not for the guests on board. WhisperPower makes the difference by supplying its New School systems.

TECHNICAL FEATURES AC POWERCUBE

- Powerful with high peak power
- Pure sine wave output with low distortion
- Steady 50 Hz frequency always
- Quiet thanks to high-frequency technology
- High efficiency ensuring limited heat output
- Heavy duty connection technology
- Energy buffer quickly recharged
- Load divided over 4 connectors minimizing stress on system
- No ripple effect in the battery thanks to smart switching technology
- As a result, longer battery life
- No “flickering” effect on 24 V
- Battery charge from shore power (max 16 amps, 120 amps)
- Fast Charger for ION Power Plus
- Battery charging from existing 230/380 V generator
- Fast and safe battery charging with the Genverter© flywheel generator (150 A)
- Multiple DC outputs, 12 and 24 Volt

No need for a frequency converter!
The new generation WhisperPower systems can be connected to shore power anywhere in the world.

TECHNICAL FEATURES DC POWERCUBE BATTERY CHARGER

- Fast battery charging
- Charging batteries with shorepower (global plug)
- Charge batteries with a 230/380 V or 120/208 generator
- Fast and safe charging through Genverter©
- Multiple DC outputs (12/24 VDC)

Benefits

- Ample power for all important onboard functions (12,24 DC, 230 VAC)
- Uninterrupted 230 V without continuous running of generator
- Intelligent energy storage in the WhisperPower ION Power Plus battery
- Genverter© - power source only switched on for battery charging and peak use
- Reduced diesel consumption
- Standard 4 to 16 amps, adjustable shore connection ensuring optimized use
- Reduced maintenance
- 10 - 20 kVA on 230 Volt AC, for air conditioning, cooking etc. whilst on shore power without having to turn the generator on
- Weight saving
- All-electric yacht, without hydraulics, now possible
- Electric propulsion easy to integrate

“At long last there is a high power capacity inverter system available that is able to provide a complete 230 V or 120 V onboard installation with power. An important innovation in this product is that you do not experience instability in the DC system which would usually cause visible fluctuations in the power line.
An important additional advantage is that if the system has been well calculated, there is no need for it to be (re)connected to other AC sources. The WhisperPower System is the ultimate solution for both smaller and larger vessels. For owners who want to cleverly handle their onboard power and for those it just want it work, hassle-free.”

Paul Eytjes, Owner / Director Eleggtricks, Engineering and Contracting, the Netherlands

Sine wave inverter / battery charger

Supreme Combi

Due to its efficient and compact design, the Supreme Combi inverter/charger is suitable for installation in tight spaces. This device provides all the required comfort expected on a yacht. All AC devices can be connected and work without issue such as a coffee machine, kettle, kitchen appliances, TV, computer etc. The multi-stage battery charger can handle any AC generator as well as the shore connection.

WORLD BEST CLASS POWER
BEST BUY!
FROM WHISPERPOWER

Available with different plug sockets

Light weight, compact

inverter / charger

Features / Benefits

- Convert 12 V battery power to alternating current
- Sine wave output power is ideal for demanding electrical motors, sensitive electronics and rechargeable devices
- Multi-stage charger ensures batteries are charged safely and efficiently
- Suitable for small microwaves, computers, televisions, power tools and more
- Detachable control display
- shore power control button
- Ideal for self installation

Connextions - plug & play

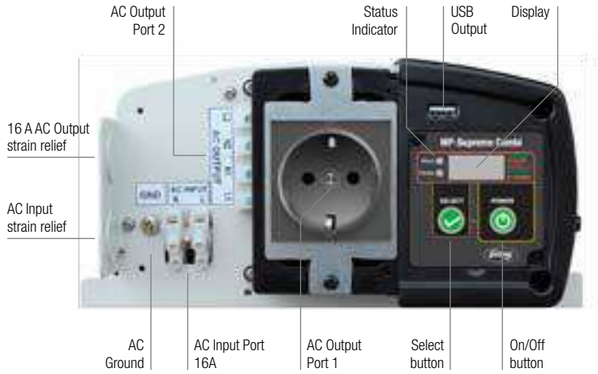

DC Input on rear of panel

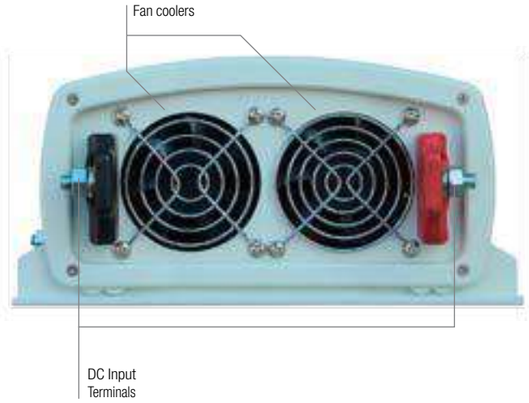

Operation and control panel, can also be positioned elsewhere (max 6 metres)

Shore power can be managed remotely

	NEW WP-SUPREME COMBI 1200-40	WP-SUPREME COMBI 2000-55
Article Nr.	61121240	61122055
INVERTER		
AC output power	1200 W	2000 W
AC output current	5.2 A	8.7A
AC peak power	2000 W	4000 W
AC output voltage / frequency	12.5 V	
AC Voltage wave form	< 1.5 A	
Nominal input voltage	10.5 ..15.5 V	
From unloaded battery	11.0/12.1V	
Voltage range DC input	11.3/12.3V	
Warning: low input voltage	10.5/11.3V	
Final warning: low input voltage	12.0/12.6 V	
Disable: low battery voltage	15.5 V	
Switching on again after low battery voltage	12.0/12.6 VDC	
Disable: high battery voltage	15.5 VDC	
USB		
USB port - phone charger	5 V, 750 mA	
AC SWITCHING RELAY		
Switching time	< 30ms	
Capacity switching relay	16A	
AC input settings	8, 10, 16A	
AC output 1 (earthed socket)	16 A max	
AC output 2 (connector hard wired)	16 A max	
DISPLAY		
Connection display	RJ12	
Inverter info	Input voltage, output power	
Charger info	Status, battery voltage	
CHARGER		
Load Voltage Range	13.5 -14.4 VDC	
Float Voltage Range	13.4 – 13.8 VDC	
Charge current (max)	40 A	55 A
Charge current settings	5,10,20,40	5,15,35,55
Battery type	GEL, Lead acid, AGM, package	
Charge characteristics	Bulk / absorption / float	
Efficiency	> 80%	
SAFETY & ENVIRONMENT		
Conformity marking	CE	
Operating temperature	0°C to 40°C	
Storage temperature	-20°C to 60°C	
Relative humidity	5-90% non-condensing	
Usage height	up to 3.000m above sea level	
WEIGHT AND DIMENSIONS		
Weight	5.7kg	6.6kg
Dimensions	230 x 478 x 114 mm	
POWER SUPPLY		
Available plug sockets	EU - UK - AUS	

Model 12/1200

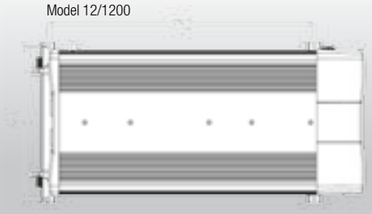

Model 12/2000

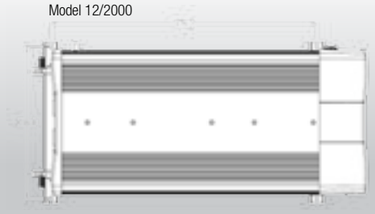

Inverter with battery charger
WP-Combi

When it comes to yachts or ships space is always limited. We see the need for and use of compact systems and therefore we have developed our sine wave inverters / chargers providing a solution for every system and every budget.

For small systems, we have our Supreme Combi with a nominal power rating of 1 or 2 kVA (Orange label). Our WP-Combi is a robust, straightforward device based on a toroidal transformer and is available for either 2 or 3 kVA power rating. The WP-Combi is one of the most powerful combi's on the market and is ideal for boats from 6 - 12 metres. Our WPC 'combi system' offers additional possibilities such as parallel operation with a generator, alternating current or other WPCs (see page 62).

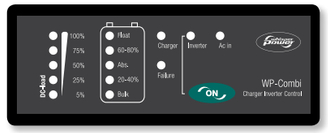

Remote control panel delivered as standard

Temperature sensor delivered as standard

Perfect combination
of 2 key functions

Features

- Continuous high output
- Exceptionally high peak power to start inductive loads such as air conditioners
- Powerful three-stage battery charger with temperature compensation
- Low-frequency technology = maximum reliability
- Compact housing and robust AC and DC connections
- 12 V, 24 V and 48 V Models
- Includes "Standby" power saving
- Equipped as standard with remote control panel and battery temperature sensor
- Charge current control

Benefits

- All-in-one, quick to install
- Extremely powerful inverter
- Powerful charger for fast battery charge
- Charging current limit when shore power is restricted
- High efficiency, minimal cooling required
- Superior protection against overload or overheating etc

	WP-COMBI 12/2000-80	WP-COMBI 24/3000-60	WP-COMBI 48/3000-30
Article Nr.	61112280	61124360	61148330
TECHNICAL SPECIFICATIONS			
Inverter	Pure sine wave	Pure sine wave	Pure sine wave
Nominal battery voltage	12 VDC	24 VDC	48 VDC
Input voltage range	10..16 VDC	20..32 VDC	40..64 VDC
Power at 25°C	2000 W	3000 W	3000 W
Continuous power at 40°C	1800 W	2600 W	2600 W
Power 1 min at 25°C	2500 W	3300 W	3300 W
Power 20 s at 25°C	3000 W	4500 W	4500 W
Maximum load	fully protected up to short circuit		
Maximum asymmetric load	1000 W	1500 W	2000 W
Load detection (standby)	>15 W	>20 W	>20 W
Power factor	maximum 1	maximum 1	maximum 1
Efficiency (at full load)	88%	92%	92%
Zero load consumption	<20 W	<25 W	<25 W
Power consumption in sleep mode	<5 W	<5 W	<5 W
Output voltage	230 VAC +/- 3%	230 VAC +/- 3%	230 VAC +/- 3%
Output frequency	50 Hz +/- 0.5%	50 Hz +/- 0.5%	50 Hz +/- 0.5%
Harmonic distortion (sine)	THD<3% THD<3% THD<3%		
Overload protection and short circuit	Switches itself off after 3 start attempts		
Overheating protection	Yes (restart)		
Charging characteristic	IUU multistep	IUU multistep	IUU multistep
Battery type	Bulk charging voltage (12 V/24 V/48 V)	Absorption charging voltage (12 V/24 V/48 V)	Float charging voltage (12 V/24 V/48 V)
GEL	14.40 V	28.50 V	55.20 V
AGM	14.40 V	28.50 V	55.20 V
Open lead acid	14.25 V	28.50 V	53.00 V
Traction	14.60 V	28.90 V	53.00 V
Equalising voltage	15.5 V	31.0 V	62.0 V
Maximum charge current	Max. 80 A (adjustable)	Max. 60 A (adjustable)	Max. 30 A (adjustable)
Temperature Compensation	-30mV/°C (via separate temperature sensor)	-60mV/°C (via separate temperature sensor)	-120mV/°C (via separate temperature sensor)
Secondary charge output	12 V/3 A	24 V/3 A	No
Power factor correction	Yes	Yes	Yes
Modes (switch)	on / off / charger only	on / off / charger only	on / off / charger only
User interface device	Load, charge phase, inverter on/off, charger operation only, AC present, limiting, charger settings (capacity, battery type, low battery voltage detection, operation mode)		
Remote control panel (RJ12)	Load, charge phase, inverter on/off, AC present		
input Voltage Range	194 .. 250 Vac (UPS-function) 170 .. 265 VAC (with generator)		
input Frequency	45 .. 65Hz (UPS-function) 40 .. 70 Hz (with generator)		
Input current (max)	30 A (built-in fuse)		
Input current to charger (max. at 230 V)	4.5 A (adjustable with knob on front)	6.6 A (adjustable with knob on front)	8.4 A (adjustable with knob on front)
Transfer time	10 .. 15 ms (UPS-function), 2 s (with generator)		
Weight	23.5kg	23.5kg	23.5kg
Dimensions	458 × 200 × 190 mm		
International Protection rating	IP21	IP21	IP21
Colour	RAL 9006 (white aluminium) and RAL 7016 (anthracite grey)		
Conforms to	EN60950-1, EN55022, CE-marked		
Operating temperature (min .. max)	-10 .. 40°C (power reduction between 40 en 65°C)		
Storage temperature	-40 .. 70°C	-40 .. 70°C	-40 .. 70°C
Relative humidity (during operation)	0 .. 95%, non-condensing		
Cooling	Mechanical	Mechanical	Mechanical
Warranty	2 years	2 years	2 years
Battery connectors	Two threaded M6 screws	Two threaded M6 screws	Two threaded M6 screws
AC connectors	M4 terminal block		

CAN ALSO BE USED AS INVERTER-ONLY

Vertical or horizontal installation

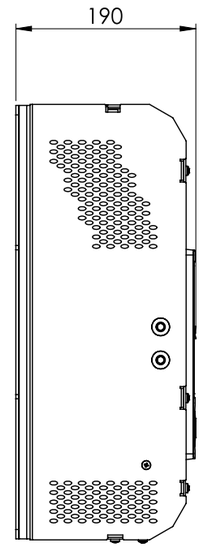

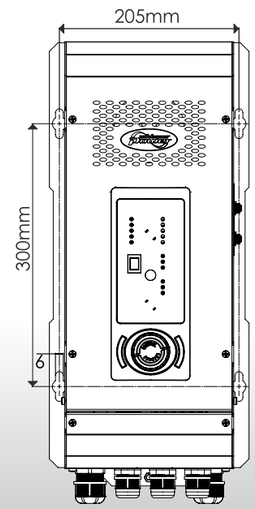

System Combi's WPC series

Our WhisperPower Centre is the ultimate inverter/charger for multifunctional energy systems. It is one of the most efficient and powerful inverters available on the market (94% yield, peak capacity 300%). The WPC can be paired to any WhisperPower SQ, SC or Genverter© AC generator using the generator input. The AC outputs can then be connected in parallel allowing the generator power or mains connection to be supplemented with the power from the inverter!

Advanced Touch Panel

Advanced TOUCH 7 inch Monitor and Control panel for local read-out(LAN) or remotely via the internet from anywhere in the world, using WhisperCare. Access can be from a phone, tablet, laptop or PC for multiple operating systems. Total system control including smart battery monitoring, WhisperPower generator control, etc. See page 102 for more information.

Smart System Features

- The WPC will boost the AC inverter power in case of limited shore / genset power
- Battery charging will automatically be reduced Power Sharing
- In addition the WPC's inverter will boost the output of the generator or shore power supply by using power from the battery
- In case of shore power "only" and low battery, the WhisperPower generator will start automatically to avoid severe battery discharge

Avanced parallel functions

- Up to 9 WPC's can operate in parallel to achieve higher power output.
- Three phase or split phase operation is also possible.
- Available for both European and American voltage/ frequeny

Key functions

- Combined high class sine wave inverter and battery charger
- AC Genset and grid power input, high/low power AC output
- Seamless integration with WhisperPower AC gensets
- Automatic seamless transfer to the active AC consumers in the output
- Parallel (stacking) to increase AC output power up to 9 units
- Paralleling to obtain three phase power (3x380 V 50 Hz)
- PowerSupport modus, parallel-to-grid to reinforce weak grid power

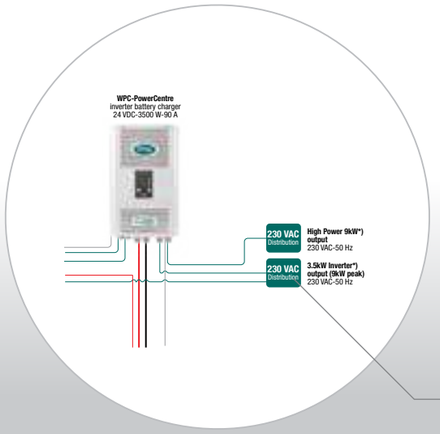

Two AC Inputs & two AC Outputs

- The WPC can be connected to two independent AC sources, for example shore power and an AC generator.The WPC will automatically connect to the active source.
- The main (inverter) output has a a seamless, no-break functionality. In the event of shore power disconnect or mains failure, the WPC takes over the power provision to the connected loads. Computers and other electronic equipment will continue to operate without interruption
- 2nd high power output is activated when shore power/ genset power is available.
- WPC includes automatic start/stop function based on low battery, can be activated throught the Touch panel.

System Combi's

Specifications

	WPC-2000-12*	WPC-3000-12**	WPC-3500-24*	WPC-5000-24**	WPC-4000-48*
Article Nr.	60201001	60201315	60201002	60201006	60201003
TECHNICAL SPECIFICATIONS					
INVERTER					
Nominal battery voltage	12 VDC	12 VDC	24 VDC	24 VDC	48 VDC
Input voltage range	9.5 .. 17 VDC	9.5 .. 17 VDC	19 .. 34 VDC	19 .. 34 VDC	38 .. 68 VDC
Continuous power at 25°C	2000 VA	2500 VA	3000 VA	5000 VA	3500 VA
Power 30 min at 25°C	2000 VA	3000 VA	3500 VA	4500 VA	4000 VA
Power 5 s at 25°C	6000 VA	7500 VA	9000 VA	12000 VA	10500 VA
Maximum load	fully protected up to short circuit				
Maximum asymmetric load	Up to continuous power				
Cos phi	0.1 .. 1				
Maximum efficiency	93%	93%	94%	94%	96%
Consumption off / standby / on	1.4W / 1.6W / 9W	1.8W / 2.1W / 14W	1.4W / 1.6W / 12 W	1.8 W / 2.1W / 14W	1.8 W / 2.1W / 14W
Output voltage	Pure sine wave 230 V (±2%) - 120 VAC / 60 Hz available as well				
Output frequency	50 Hz ± 0.05% (crystal controlled; adjustable to 60 Hz)				
Harmonic distortion (sine)	<2% THD				
Overload protection and short circuit	Switches itself off after 3 start attempts				
Overheating protection	Warning, followed by shutdown and automatic restart				
BATTERY CHARGER					
Charge characteristics	Multi-step: bulk-absorption-float, Suitable for all types of batteries				
Maximum charger current	100 A	160A	90 A	140 A	50 A
Temperature Compensation	With WhisperPower temperature sensor WPC-BTS				
Power factor correction	61000-3-2				
GENERAL SPECIFICATIONS					
Input voltage range	184 .. 250 V				
Input frequency	45 ..65Hz				
Maximum input current (switching relay) / maximum output current	30 A/50 A	50 A/56 A	30 A/45 A	50 A/56A	30 A/47A
Transfer time	<15ms				
Weight	25 kg		28 kg	40 kg	28 kg
Dimensions h x b x d (mm)	510 × 330 × 190	500 × 300 × 230	510 × 330 × 190	500 × 300 × 230	510 × 330 × 190
International Protection rating	IP21				
Colour	RAL 9003				
Conforms to	EMC Directive 2004/108/EC : EN 61000-6-1, EN 61000-6-3,				
Operating temperature range	-20 .. 40°C (power reduction 40 .. 55°C)				
Relative humidity (during operation)	95%, non-condensing				
Cooling	Temp. controlled fan above 45°C				
Noise level	<40dB / <45dB (without / with cooling)				
Warranty	2 years, 5 years as part of complete system				

*) Designed for use with Whisper Piccolo / SQ / Genverter, dual input - also available with single input

**) Single AC input and dual AC outputs. Go to page 112 for our WhisperSwitch external transfer relays.

CE

PLUG & PLAY

- Auto start stop connection (see also WPC – BSI)
- Connection for Temperature Sensor (to be put on battery)
- WPC Bus interface connection to Remote panel (RCC/ Touch)
- Connection for RS 232 Data Logger Module

SAFETY FIRST

- Galvanic input to output separation
- Earth stud
- Completely protected against overload and overtemperature

EASY TO INSTALL

- As standard supplied with 2 metres of marine grade DC cables
- Hard wiring connection of all AC & DC connections
- Optional plug-in slave charger of 5 A, three step
- External holes for wall mounting

- AC Output Gen/Grid/Inv.

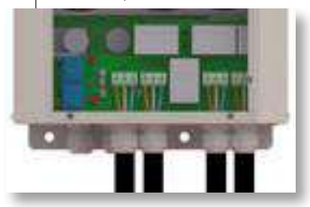

WPC DIMENSIONS

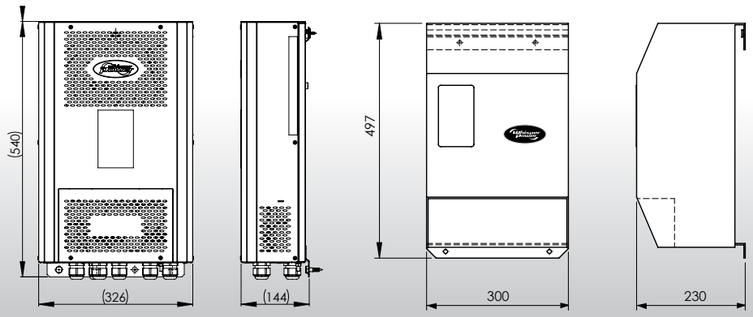

WPC 12-2000 / 24-3500 / 48-4000

WPC 12-3000 / 24-5000

Important Accesories / Related Products

WPC-BSI 500 Battery Status Interface
Art. Nr. 60201082

WPC-RS232 Data Logger Module with SD memory card Art. Nr. 60201084

WPC-BUS cable 15 meter
Art. Nr. 60201032

WPC auto start/stop cable 15 meter
Art. Nr. 60201030

WPC 24 VDC - 5 A Slave Charge (2nd, 3rd output)
Art. Nr. 60201021

WPC-BTS Battery Temperature Sensor
Art. Nr. 60201086

WP Touch 7 inch screen (art no. 40280101)

Battery Chargers Handy series

Our Handy battery chargers are ideal for charging all kinds of small batteries. Whether it is for sealed batteries for watercraft or fishing boats or larger open lead acid starter batteries in extensive electrical systems, the fully automatic Handy quickly and completely charges, benefiting both the lifespan and reliability of the battery. The Handy chargers, which include a bracket for fixed mounting, are supplied with everything needed to connect the charger to the AC source and battery. There are four versions available for 12 V batteries: 2 A, 7 A, 15 A and 24 V 6 A.

WORLD BEST CLASS POWER
BEST BUY!
FROM WHISPERPOWER

Plug and play battery chargers
for smaller batteries

Features
- Advanced five-step charging process
- Fully automatic, suitable for GEL, AGM and open lead acid batteries
- Setup menu for each type of battery
- Temperature sensor for safe charging fitted as standard
- Clear charge status indicator
- Built-in flash light in 7 A and 15 A versions
- Plug & play, ready to use

Benefits
- Fast and complete battery charge
- Handy charger can remain connected to the battery
- Significantly increases battery life span
- Safe polypropylene housing, suitable as separate and fixed charger (IP54)
- Water resistant, suitable for outdoor use
- Compact and easy to install
- Outstanding price-performance ratio

Applications
- Charging 12 V starter battery
- Charging 12 V service battery
- Charging 12 V back-up battery
- Speed boats
- Fishing boats
- Small day cruisers
- Water craft

	WBC-HANDY 20*	WBC-HANDY 70	WBC-HANDY 150	WBC-HANDY 24/6
Article Nr. European plug	61112002	61112007	61112015	61124006 **
Article Nr. UK plug	61112003	61112008	61112016	
TECHNICAL SPECIFICATIONS				
Input voltage	220 .. 240 Vac ± 10%	220 .. 240 Vac ± 10%	220 .. 240 Vac ± 15%	220 .. 240 VAC ± 15%
Input current	0.3 A	0.9A	1.5 A	1.8 A
Back current	≤1mA	≤1mA	≤1mA	≤1mA
Charge voltage	13.7 .. 15.0 VDC	13.7 .. 15.0 VDC	13.7 .. 15.0 VDC	26.5 .. 28.8 VDC
Charging voltage supply mode	13.7 VDC	13.7 VDC	13.7 VDC	27.2 VDC
Charge current	Max. 2 A	Max. 7A	Max. 15 A	Max. 6 A
Ripple voltage	Max. 70mV	Max. 70mV	Max. 70mV	Max. 70mV
Ambient temperature	-25 ..+50ºC	-40 ..+50ºC	-40 ..+50ºC	-25 ..+50ºC
Cooling	Convection	Convection	Convection	Convection
Charge characteristics	Five steps IUIU + float	five steps IUIU + float	five steps IUIU + float	three step IUIU + float
Forced Float		13.7 VDC		27.2 VDC
Lead acid battery types ***	AGM, GEL, Wet	AGM, GEL, Wet	AGM, GEL, Wet	AGM, GEL, Wet
Battery capacity	1 .. 40 Ah	1 .. 150 Ah (max. 180 Ah)	20 .. 300 Ah (max. 360 Ah)	10 .. 300 Ah (max. 360 Ah)
Battery cable length	1300mm	1500mm	1500mm	1500mm
Power cable length	1000mm	1400mm	1400mm	1400mm
European plug	IEC60884	IEC60884	IEC60884	IEC60884
UK plug	BS1363	BS1363	BS1363	BS1363
Dimensions (lxbxh)	157 × 33 × 34 mm	225 × 50 × 50 mm	325 × 65 × 60 mm	155 × 80 × 43 mm
International Protection rating	IP44	IP54	IP54	IP65
Weight	0.35 kg	0.5 kg	0.8 kg	0.8 kg

* no build-in flashlight ** Fixed mounting *** with automatic discharge /charge cycles

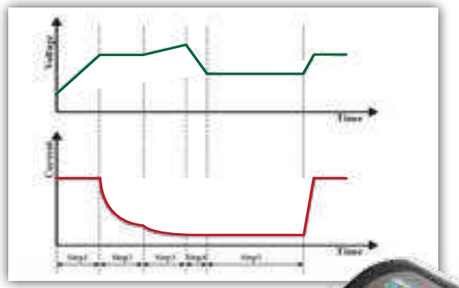

Graph illustrating multi step charge algorithm

Article Nr. 61124006	Article Nr. 61112911
WBC-HANDY set for fixed installation	WBC-HANDY clamps for fast connection

Open lead acid ✔
AGM ✔
GEL ✔

Battery Chargers
Supreme Series

WORLD BEST CLASS POWER • BEST BUY! • FROM WHISPERPOWER

WhisperPower's Supreme series battery chargers are designed for fixed installation in yachts and other vessels. These are powerful battery chargers which can charge three different batteries simultaneously. The Supreme charger is easy to programme for GEL, AGM and open lead acid batteries. The charger can handle input voltages from 90 to 265 VAC (50 / 60 Hz) and can therefore be used worldwide.

12 V/20 A 12 V/40 A 12 V/60 A (24 V/30 A)

Connection compartment

Supplied battery temperature sensor

Perfect Solution
for charging multiple batteries

Features

- Designed to charge three different batteries simultaneously
- Also suitable for one or two batteries
- Batteries can differ in capacity (Ah)
- Programmable for GEL, AGM, open lead acid and Lithium-ion batteries
- Temperature sensor standard
- Temperature sensor protects against risk of gas production
- Automatically adjusts supply voltage for worldwide use
- Works with small gasoline or diesel generators
- Complies with CE and ABYC standards

Benefits

- Fast charge even with low input voltage
- Each output can be programmed differently
- Battery connection easily accessible, AC power cord supplied
- Quick to install
- Quiet - no hum from transformer
- Maximized battery life
- Outstanding price - performance ratio

INDIVIDUAL SET UP OF EACH OUTPUT

MODEL	12 V/20 A	12 V/40 A	12 V/60 A	12 V/100 A	24 V/30 A
Article Nr.	61112302	61112304	61112306	61112310	61124303
CHARGER OUTPUT					
Maximum charging current	20 A	40 A	60 A	NEW! 100 A	30 A
Output voltage range:					
Bulk	14.2 .. 15,5 V				28.4 .. 31V
Float charge	13.4 .. 13.8 V				26.8 .. 27.6 V
Equalization	16.0 V				32V
Charge characteristic	Three step (bulk/absorption/float)				
Number of DC outputs	**Three - each output can be selected individually, 20 A –> 1 output**				
Selectable battery type	GEL, AGM, wet cell, lithium				
Leakage current	< 2mA				
CHARGER INPUT					
Input voltage (nominal)	100, 120, 220, 230, 240 VAC				
Input voltage tolerance	90 .. 265 VAC				
Input frequency range	47 .. 63Hz				
Power consumption (full load)	350 W	700 W	1050 W	1800 W	1050 W
Power factor correction	Yes				
Charge efficiency	> 82%			> 84%	> 82%
PROTECTION AND FEATURES					
Reverse battery current plus/min	Yes, device shuts down				
Overload	Yes, device shuts down				
Overheating	Yes, device reduces charger power and shuts down				
Short circuit output power	Yes, device shuts down				
DC fuse	2*15 A/32 V	2*30 A/32 V	3*30 A/32 V	3*30 A/32 V	3*30 A/32 V
Cooling	Mechanical				
Temperature sensor port	RJ12 (use of optional)				
Digital display port	RJ12 (use of optional)				
DISPLAY					
LCD Display (with back lighting)	Charging status, battery voltage				
Warning and fault code	A01-02, E01-09				
AC AND BATTERY CONNECTIONS					
AC input connection	Hardwired or AC Cord				
DC input connection	Heavy duty threaded screws (for 3 batteries)				
DC output (min)	Shared, heavy duty threaded screws				
AMBIENT AND OPERATING TEMPERATURE					
Storage temperature	-40°C .. 70°C				
Operating temperature	-20°C .. 60°C				
Relative humidity	5-95%, non-condensing				
International Protection rating	IP32 (24/20 IP65)				
WEIGHT AND DIMENSIONS					
Weight	2,4 kg	2,6 kg	4,0 kg	6,4 kg	4,0 kg
Dimensions (mm)	295×206×86	295×206×86	356×206×99	400×236×112	356×206×99
CONFORMITY					
Standards/safety (North-America)	Conforms to UL1236 with marine appendix UL1564 CSA C22.2 107.2-01				
Standards/safety (European Union)	CE Marking for Low Voltage Directive 2006-95-EC Conforms to EN60335-2-29 (battery chargers) Conforms to IEC60529: 2001, protection class IP32				
Standards/safety (North-America)	Class B FCC Part 15B and ANSI C63.4				
Standards/safety (European Union)	CE Marking for EMC Directive 2004-108-EC Meets EN55014-1, EN55014-2, EN61000-3-2 and EN61000-3-3 (in accordance with IEC standards)				

Article Nr.	Optional (not for 24/20 model)
61112301	WP-BCC Remote panel with 6 meter cable

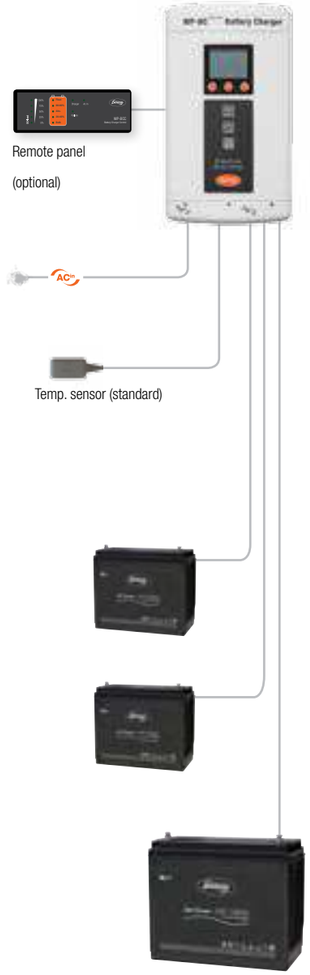

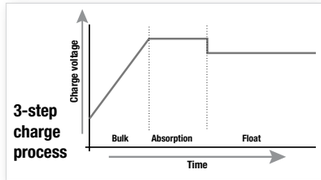

3 step charge curve with the supreme

For Charging 48 VDC batteries go to WPC & WP Combi 48 V models

WP-BC Supreme Pro

Battery charger / rectifier series

Commercial vessels, high-end recreational vessels and off-shore platforms carry an enormous amount of electrical and electronic devices that require a safe and non-stop power provision. WhisperPower's Supreme professional battery chargers combine three vital functions. Smooth, ripple free multiple step battery charging, a power supply function to buffer DC appliances in a direct way and a complete alarm and monitoring device for the entire 24 VDC system. All models are prepared to operate from 90-265 VAC/ 50-60 Hz input and are fitted with three separate outputs.

Perfect all-in-one solution

- Powerful battery charger, suitable for any type of battery
- Ripple free rectifier to operate DC appliances in a direct way
- 3 separate outputs to charge multiple battery banks
- Universal single phase input (90-260 VAC, 50-60 Hz, full power)
- Proven switched mode technology, cool operation, IUoUo charging
- Parallel use for high power central (DC-UPS) power systems possible

Standard features

- Compact, light weight, aluminium enclosure for bulk head or table top mounting
- Full functional LCD front display with backlight, on/off switch, read-out selector button. Battery monitor operational, at "on" or "off" position
- Charge protocol selection by dipswitch, USB and laptop, including Lithium ION
- Temperature sensor with 12 metre cable and plug
- Robust AC and DC M8 bold connections to connect 3 separate batteries
- Conformal coating protection of power module inside
- Perfectly suitable to back up GMDSS systems
- 5 Year Product Warranty

Alarms and monitoring

- Potential free contacts to detect "AC failure" and "charger failure" alarms, "DC voltage high/ low alarm" and "charger temperature" alarm
- WhisperConnect Can-Bus (2x) connection to any other can systems, incl NMEA 2000.
- Analogue interfaces, + and - sense.
- USB interface for charge characteristic programming
- Remote panel with current adjust, to reduce AC consumption

Optional

- WhisperPower TOUCH 5, 7 or 10 inch remote panel
- Analogue remote panels showing "charge status" and "current" control
- Batteries AGM, GEL or Lithion ION

NMEA 2000 Compatible

Control at a glance

Compact, easy to connect remote panels, WP-Touch or LED based analogue panels, with remote adjustment feature to adjust the charge current according to the AC power availability

The right approval

We offer the entire range with class approval of choice, which includes DNV, Lloyds, bureau Veritas, ABS etc.

GMDSS systems

The right choice for back up power systems connected to Global Marine Distress and Safety systems, all relevant alarms fitted as standard

Wide selection

Supreme Pro 24/40,24/60, 24/80 and 24/100. Robust design suitable for extreme harsh circumstances.

Advanced LCD display

All vital information available at a glance by our backlighted LCD display, on/off button and read-out selection button (V, A, charge, discharge, battery monitoring).

No limitations

Any battery, either GEL, AGM, open lead acid, traction or semi-traction, or Lithium ION can be connected to the Supreme Pro, easy programming by dip switch USB or laptop. 3 separate batteries can be connected (1 main, 2 x 6 Amp, all multiple step)

Professional connections

Internal AC and DC connections (hard wiring) with maximum distance in between, plug and play single cable connectivity for the following functions:

- Remote panels
- Temperature sensor, to be put on the battery
- WhisperConnect Can Bus connection 1
- WhisperConnect Can Bus connection 2
- USB interface for specific uploading

Global plug

Universal AC input, from 90 – 265 AC, 50/60 Hz, over the whole range full DC output

All the features and benefits

a professional battery charger should have

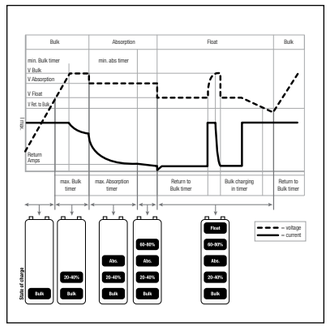

Clear indications at the Liquid Crystal (LCD) Display showing DC charge current, DC load (even when the charger is switched off), DC voltage and various AC/ DC failure alarms. The graph is showing the charge characteristics of the Supreme Pro charger in case lead-acid batteries are connected. For lithium batteries a constant voltage mode can be selected.

Conformal coating of the electronics inside ensures a long life time of the charger even in salty environments

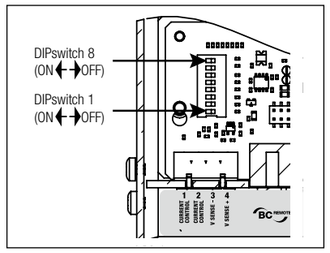

Easy accessible selector dip switches for various settings.

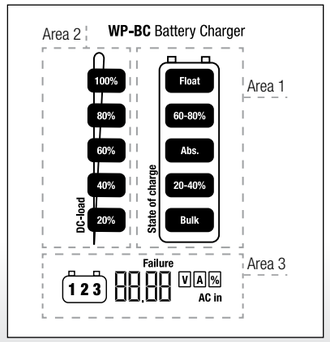

LCD display indicates Voltage (DC) and amperes in figures, amperes also in graphics. Information button to select battery 1, 2 or 3. Display is in conformity with GMDSS requirements and is showing the necessary values.

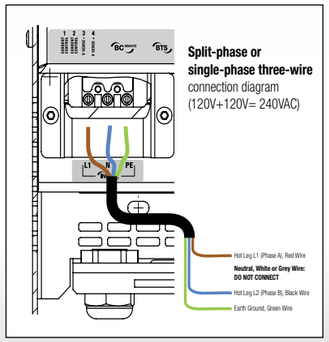

AC connection compartment, hard wiring for AC connection cables. Universal input 110/120/230 VAC, 50-60 Hz

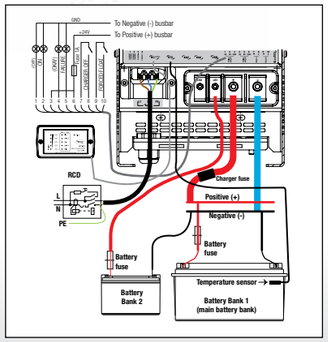

Easy accessible connection compartment, with proper glands for the incoming cables. Robust, heavy duty studs for the battery/ DC connections, kept separate from the printed circuit board.

Battery Charger
Supreme Pro

	24/40-3	24/60-3	24/80-3	24/100-3
Art. nr.	60205440	60205460	60205480 [1]	60205401 [1]
GENERAL SPECIFICATIONS				
Nominal input voltage	120/230V (90-265V)	120/230V (90-265V)	120/230V (90-265V)	120/230V (90-265V)
Nominal input frequency	50/60Hz (45-65Hz)	50/60Hz (45-65Hz)	50/60Hz (45-65Hz)	50/60Hz (45-65Hz)
Nominal output voltage	24V	24V	24V	24V
Total charge current	40A @ 28.8V	60A @ 28.8V	80A @ 28.8V	100A @ 28.8V
Number of battery outlets	3	3	3	3
Charge current second output	6A, ±1A	6A, ±1A	6A, ±1A	6A, ±1A
Charge current third output	6A, ±1A	6A, ±1A	6A, ±1A	6A, ±1A
Charge characteristic	IUoUo	IUoUo	IUoUo	IUoUo
Charge voltage Bulk (25°C) [2]	28.8V	28.8V	28.8V	28.8V
Charge voltage Absorption (25°C) [2]	28.5V	28.5V	28.5V	28.5V
Charge voltage Float (25°C) [2]	26.5V	26.5V	26.5V	26.5V
Max. Absobtion time [2]	4 hours	4 hours	4 hours	4 hours
Max. Bulk time (start @ 13.25/26.5V) [2]	8 hours	8 hours	8 hours	8 hours
Min. Absorption time [2]	15 min.	15 min.	15 min.	15 min.
Enclosure type & dimensions (hxwxd in mm)	445 x 210 x 145	445 x 210 x 145	445 x 210 x 145	445 x 210 x 145
Enclosure type & dimensions (hxwxd in inch)	17,5 x 8,2 x 5,7	17,5 x 8,2 x 5,7	17,5 x 8,2 x 5,7	17,5 x 8,2 x 5,7
Weight	5.3 kg /11.7 lbs	5.3 kg /11.7 lbs	5.3 kg /11.7 lbs	5.3 kg /11.7 lbs
Battery capacity (recommendation)	80-400Ah	120-600Ah	160-800Ah	200-1000Ah
TECHNICAL SPECIFICATIONS				
Power factor (cos phi)	≥ 0.98	≥ 0.98	≥ 0.98	≥ 0.98
Full load consumption (230VAC)	1400VA	2000VA	2700VA	3375VA
Temperature compensation	by BTS-Battery temperature sensor, standard supply			
Voltage compensation	yes, automatic	yes, automatic	yes, automatic	yes, automatic
DC consumption with connected battery	< 5mA	< 5mA	< 5mA	< 5mA
Display	LCD	LCD	LCD	LCD
Temperature range	-25 to +60°C / -13 to 140°F, above 40°C derating			
Cooling	vario fan and natural cooling to ensure optimized cooling			
Sound level	< 52dBA @ 7 m	< 52dBA @ 7 m	< 52dBA @ 7 m	< 52dBA @ 7 m
Protection degree	IP23	IP23	IP23	IP23
Optional	- Remote panel WP-SCC with current adjust - Touchpanel 5, 7 or 10 inch - RJ45 CAN terminator			[1]) Available autumn 2018

Remote panel supplied as standard, with LED indicators

Optional remote panel with additional Charge Current Adjust button (electronic potentio meter)

Temperature sensor, supplied as standard, including 6 metres connection cable, To be connected to the main battery

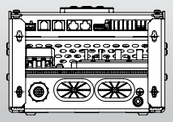

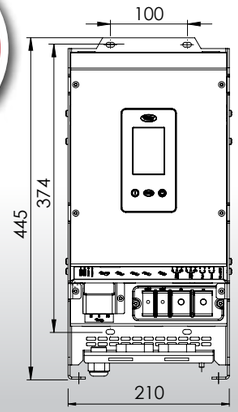

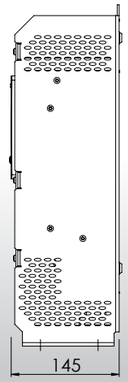

Battery Charger
DC PowerCube series

The DC PowerCube is designed for more extensive electrical systems with a large battery bank and significant DC-consumption. The DC PowerCube converts the delivered power (from the grid or generator) to DC for lighting, electronic equipment, pumps and other DC loads.

The DC PowerCube can deliver up to 4.3kW (24 V or 48 VDC), enough to charge batteries quickly whilst still providing the various DC and AC loads with power for all equipment on board of even the biggest yachts and ships. The DC PowerCube can even be used as a power supply, without batteries, as the smooth output voltage is incredibly uniform and ripple free.

Dual functionality

The WhisperPower DC PowerCube and our extremely efficient Genverter© is a pairing that makes perfect sense. Should there not be enough capacity from the AC connection, the Genverter© supplements the supply via the DC PowerCube. With a Genverter© connection, the DC PowerCube, in combination with an AC PowerCube or WPC Combi's, can provide power the entire DC and AC system.

Remote control panel supplied as standard with DC PowerCube

Same enclosure for 48 V/80 A

Heavy duty battery charger/power supply
at system level

Features

- DC power up to 150 A (80A-48V)
- AC can be adjusted from 4 A to 16A
- Provides up to 3,5kW (24 or 48 VDC) from shore power
- Up to 4,3kW from Genverter©
- Adjustable Genverter© load (as well as rpm)
- Second 24 VDC output (three-step), 5 A
- 12 V/20 A output, three-step, for 12 VDC batteries
- Standard analogue panel supplied
- WhisperConnect CAN bus connection for central monitoring
- Suitable for worldwide use, 90 to 260 VAC, 50 / 60 Hz (automatically adjusts)

Benefits

- High powered charger / power supply for entire DC-system
- Ultra-short charging time and therefore saves fuel
- Battery type adjustable from laptop or dipswich settings: GEL, AGM, traction, open lead acid, Lithium-ion
- Smooth, ripple-free DC output - no "flickering" lights
- Various outputs: 24 VDC main output, 24 VDC slave, 12 VDC for one or more batteries
- Can be connected to any mains voltage or capacity
- Dual input: AC supply supplemented with uniform Genverter© input

	WP-DC POWERCUBE 24/150	WP-DC POWERCUBE 48/80
Article Nr.	60202002 / Battery charger	60202003 / Battery charger
GENERAL SPECIFICATIONS		
Nominal battery voltage	24 VDC	48 VDC
Charge current	0-150 A (protected against short circuit)	0-80 A (protected against short circuit)
Output voltage	26.5 .. 28.5 VDC	43.0 .. 57.0 VDC
Recommended battery capacity	300 to 1500 Ah	200 to 1000 Ah
Charge characteristic	Three step, each step selectable (Lithium)	
Secondary charge output	24 V/5 A 12 V/20 A (three steps) protected against short circuit	
INPUT SPECIFICATIONS		
AC voltage	90 .. 264 Vac (45 .. 65Hz), earthed	
Input current	Adjustable from 2 A to 16A	
Power factor (cos ph)	> 0.9	> 0.9
Genverter© current	80 .. 300 Vac (45 .. 65Hz), three phase	
Input current from Genverter©	Adjustable from 2 A to 14.5 A	
Power factor (cos ph)	> 0.85	> 0.85
Power factor correction	In accordance with EN 61000-3-2	In accordance with EN 61000-3-2
TECHNICAL SPECIFICATIONS		
Temperature Compensation	–30 mV/°C	
Battery type	Open and closed lead acid (GEL/traction/AGM/spiral) and Lithium-ion	
Leakage current	<5 mA per battery bank)	
Charge voltage	Bulk, absorption, float	
Charge voltage AGM / GEL at 25°C	28.80 VDC, 28.50 VDC, 27.20 VDC	57.60 VDC, 57.00 VDC, 54.40 VDC
Charge voltage traction battery at 25°C	29.20 VDC, 28.90 VDC, 26.50 VDC	58.40 VDC, 57.80 VDC, 53.00 VDC
Charge voltage open lead acid at 25°C	28.50 VDC, 28.50 VDC, 26.50 VDC	57.00 VDC, 57.00 VDC, 53.00 VDC
Charge voltage Lithium-ion at 25°C	28.80 VDC, 28.60 VDC, 28.00 VDC	57.60 VDC, 57.20 VDC, 56.00 VDC
Switch point absorption-float	at 6% of Imax	at 6% of Imax
Charge status PowerCube on/off	Digital output (relay, two-way contact)	
Failure condition present	Digital output (relay, two-way contact)	
DC PowerCube disabled	Digital input (potential free, disabled if closed)	
Genverter© input disabled	Digital input (potential free, disabled if closed)	
Conforms to	EMC Directive 2004/108 / EC: EN 61000-6-1, EN 61000-6-3, EN 55014, EN 55022, EN 61000-3-2, EN 62040-2 Low Voltage Directive	
PROTECTIONS		
Protection against overheating	Yes, derating above 40°C, shuts down at high temperatures (automatic restart once cooled down)	
Over voltage protection (manual restart needed)	36 ± 0.5 VDC	68 ± 0.5 VDC
International Protection rating	IP21	IP21
MECHANICAL SPECIFICATIONS		
Main battery connection	2× threaded M10 screws	2× threaded M10 screws
Secondary battery connection	1× threaded M5 screws	1× threaded M5 screws
Earth clamp	1× threaded M6 screws	1× threaded M6 screws
AC input	M3 triple terminal block	M3 triple terminal block
Genverter© input	M3 triple terminal block	M3 triple terminal block
Remote control panel	RJ12	RJ12
Battery temperature sensor	RJ12	RJ12
WhisperConnect CANbus	RJ45	RJ45
Voltage measurement	Phoenix MSTB 2.5/2-ST-5.08	Phoenix MSTB 2.5/2-ST-5.08
Digital outputs	6× faston (6.3×0.8)	6× faston (6.3×0.8)
Digital inputs	4× faston (6.3×0.8)	4× faston (6.3×0.8)
Dimensions hxbxd (mm)	575×221×316	575×221×316
Operating temperature range	–20 .. 55°C (power reduction above 40°C)	
Relative humidity during operation	to 95%, non-condensing	to 95%, non-condensing
Cooling	Combined (convection and variable mechanical)	
Weight	26kg	26kg
Noise level	<52dB	<52dB
Warranty	2 years	2 years
Accessories (standard supply)	Battery temperature sensor and remote control panel	

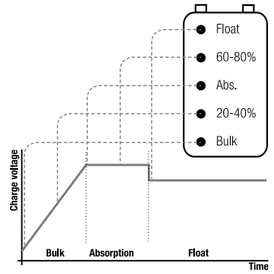

The DC PowerCube uses a multi-step charging algorithm (IUoUo) whereby the batteries are charged quickly and safely and their lifespan is extended. The different stages of the charging process can be viewed on the DC PowerCube's charge bar and on the remote control panel. If the DC PowerCube is charging, the bulk-LED is always on. The indicator for 20-40% illuminates if the charging voltage is higher. If the charging voltage is increased to the bulk value of 28.5 / 57 (depending on the type of battery), the charger switches to the absorption phase. The charging current decreases, and when it has fallen to less than 6% of the maximum charging current, the indicator for 60-80% illuminates. 15 minutes later, the charger moves to the float phase. If the battery voltage drops to 25.6 / 51.2, the charger switches once again from float to bulk mode.

Storing Power

Power storage

Reliable 'energy tank'

Batteries play an integral role in our everyday life: cell phones, laptops, tablets, navigation devices, you name it, they all require energy from a battery. In terms of yachts or commercial vessels, it is hard to imagine the battery as the key energy source, as the supply for all major functions such as starting the engine, powering navigation, onboard computers and operating lighting systems.

What all our batteries have in common

- Sealed and maintenance-free
- Safe - no risk of battery acid leak or gas formation
- Can be installed at an angle
- Non-hazardous and qualify for airfreight.
- Shockproof - if the battery is damaged liquid will not escape
- Designed for a large number of charge / discharge cycles
- Designed to last 10-20 years (under the appropriate operating conditions)
- Provided with the correct charging devices via the WhisperPower Network
- Low self-discharge - batteries can be stored for months without need to be recharged
- Little ventilation necessary in the location where the batteries are placed
- Delivered with extended system warranty
- Our warranty is valid worldwide, replacement is simple

In a WhisperPower system the battery does in fact play a key role. It is the central "energy tank ' which also supplies power to the inverter, or combined inverter / Genverter© / generator system. Choosing the correct battery capacity and technology is crucial for the functionality, safety and durability of these systems. We assist you in choosing the right battery for your installation. The following pages provide more information on the various types of batteries available and about the differences between each of our products.

Sealed maintenance-free batteries

We advise against the use of open lead acid batteries. These are not as safe as sealed, maintenance-free batteries due to the the risk of gas formation and the need to top up the battery with distilled water from time to time. Open lead acid batteries require good ventilation. In comparison, AGM batteries (Absorbed Glass Matt) are hardly any more expensive and far easier to use. GEL batteries are, on average, 30% more expensive due to the technology applied but this results in a longer life span.

AGM batteries (see page 82)

- The most cost effective maintenance-free, sealed batteries
- Designed for extensive electrical systems (cyclic operation)
- Can also be used to start engines
- Ideal power source for pumps, winches and other temporary loads
- Available from 55 Ah to 260 Ah, 12 V (24 V or 48 V in series)

GEL batteries - semi traction (see page 84)

- Heavy duty, long life, deep cycle battery
- Designed for daily charge / discharge cycles
- Can also be used to start engines
- Ideal as AC/DC inverter supply
- Suitable for slow discharge / charge and for high surge in/out
- Available from 110 Ah-225 Ah

GEL Batteries - 2 V cells, forklift / traction quality (see page 86)

- Designed to last for over 10 years
- Suitable for a large number of charge cycles (1200 to 3000 depending on discharge level)
- Ideal battery for large battery banks (600 to 2100 Ah)
- Best option for intensively used heavy duty inverter(s)
- Suitable for high charge current (50% of nominal capacity)
- 7 year warranty

Lithium-ion batteries (see page 88)

- High energy density
- Up to 50% space saving in comparison to GEL/AGM
- 30-40% weight saving
- Longest life span in number of cycles, approx. 5000
- Complete with Battery Management System (BMS) to maintain balance of cells
- Complete with WIB (Whisper Interface Box) and WhisperPower DC distribution systems

Manufacturing partners

The specifications of all WhisperPower batteries are meticulously defined by us based on the requirements of our systems. The factories manufacturing our batteries have been carefully selected and meet the following very important criteria:

- **Only the best is good enough**
- **We only work with premium manufacturing partners**
- **Manufacturing processes must be of highest class and absolutely non-polluting**
- **Our main manufacturing partner is a NASDAQ listed company employing more than 2000 personnel and is fully ISO9001:2000 certified**

We are very impressed by WhisperPower's product range, plus the service is faultless. We deliver our deck-saloon sail yachts to customers around the world fully satisfied that we are guaranteed accurate technical support.

Torsten Schmidt
Sirius-Werft GmbH, Plön, Germany

Durable
AGM batteries

These are the most economical, maintenance-free batteries designed for long life. WhisperPower AGM batteries are based on VRLA technology (Valve Regulated Lead Acid), meaning they require little ventilation, do not have to be positioned upright and do not require any maintenance.

Typical example of an AGM battery bank powering a 3.5kW inverter

Applications

- Starting main and auxiliary engines
- Powering pumps and winches
- Power supply for entire DC installation
- Back-up battery for vital functions such as radios/transmitters
- Suitable for medium sized inverters

Recommended Use

- Charge according to three step process (IUoUo) (see page 69 and 74)
- Keep battery connected to the charger even when not in use
- Use the temperature sensor to monitor the temperature of the battery
- Fit with ACR regulator as alternator will charge the battery faster and to 100% (see page 49)

Technical specifications AGM batteries

	AGM 55 Ah	AGM 80 Ah	AGM 90 Ah	AGM 100 Ah	AGM 145 Ah	AGM 165 Ah	AGM 200 Ah	AGM 260 Ah
Article nr.	40290060	40290061	40290030	40290031	40290062	40290033	40290063	40290064
TECHNICAL SPECIFICATIONS								
Nominal capacity	55 Ah	80 Ah	90 Ah	100 Ah	145 Ah	165 Ah	200 Ah	260 Ah
C10* or C20	C10	C10	C10	C10	C10	C20	C10	C10
Nominal voltage	12,0 VDC	12,0 VDC	12,0 VDC	12,0 VDC	12,0 VDC	12,0 VDC	12,0 VDC	12,0 VDC
Type	Deep discharge Absorbed Glass Mat battery with potential 10 year life span on float voltage, specifically designed for intensive cyclic use. Cyclic life 30% longer thanks to strong grid and a specific paste composition. Suitable for marine, mobile and solar energy system and as a starter battery							
Weight ± 10%	18.0kg	24.0kg	28.5kg	30.0kg	44.0kg	47.0kg	60.0kg	74.0kg
Dimensions lxwxh (mm) (excl. poles)	229×138×210	350×167×180	307×169×211	328×172×222	340×173×280	483×170×240	522×240×219	520×268×220
Terminal type	M6 rvs				M8 rvs			
Number of cells	6	6	6	6	6	6	6	6
CHARGE / DISCHARGE PARAMETERS								
Constant charge voltage (IU, float)	13.60 .. 13.80 VDC at 25ºC							
Cyclic charge voltage (IUU, absorption)	14.25 .. 14.60 VDC at 25ºC							
Maximum recommended charge current (higher possible)	40 to 50% of nominal capacity							
Temperature ratio	-4mv/cel/°C							
Discharge voltage	1.75 VDC @ (A) ≤ 0.2ºC • 1.70 VDC @ 0.2 ºC (A) ≤ 1.0ºC							
Full discharge (100% DOD)	1.65 VDC @ (A) ≥ 1,0ºC							
NOMINAL CAPACITY AT 25°C	UP TO 1.75 VDC/CEL	UP TO 1.75 VDC/CEL	UP TO 1.75 VDC/CEL	UP TO 1.75 VDC/CEL	UP TO 1.80 VDC/CEL	UP TO 1.80 VDC/CEL	UP TO 1.80 VDC/CEL	UP TO 1.80 VDC/CEL
20 hours discharge	58.6Ah	85.3 Ah	96.0 Ah	104.0 Ah	167.0 Ah	165.0 Ah	226.0 Ah	278.0 Ah
10 hours discharge	55.0 Ah	80.0 Ah	90,0 Ah	100.0 Ah	145.0 Ah	157.0 Ah	200.0 Ah	260.0 Ah
5 hours discharge	44.5 Ah	65.0 Ah	73,0 Ah	89.0 Ah	131.0 Ah	134.0 Ah	180.0 Ah	220.0 Ah
Peukeurt Coefficient	1.21<P<1.24							
Usage at 25 A discharge	92 min	146 min	164 min	190 min	305 min	320 min	455 min	630 min
Self discharge	Less than 3% per month at 25°C							
Storage time	AGM batteries can be stored for up to 6 months at 25°C, recommended to charge before use							
BATTERY PARAMETERS								
Inrush Current at 25°C (5s)	550 A	800 A	900 A	1000 A	1450 A	1650 A	2000 A	2600 A
Cyclic life at 80% discharge	400	400	400	400	400	400	400	400
Internal resistance (approx.)	6,0mΩ	5,5mΩ	5,2mΩ	5,0mΩ	4,5mΩ	3,8mΩ	4,0mΩ	3,5mΩ

*) C10= measured capacity at 10% discharge per hour over 10 hours

Discharge effect on battery life

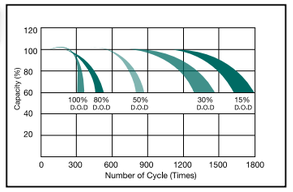

Storage Effect

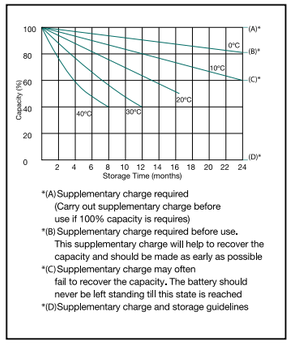

Discharge curves

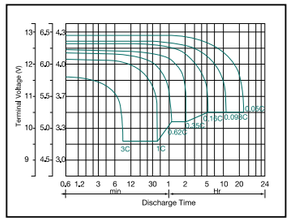

Battery terminals (optional)

Installation dimensions

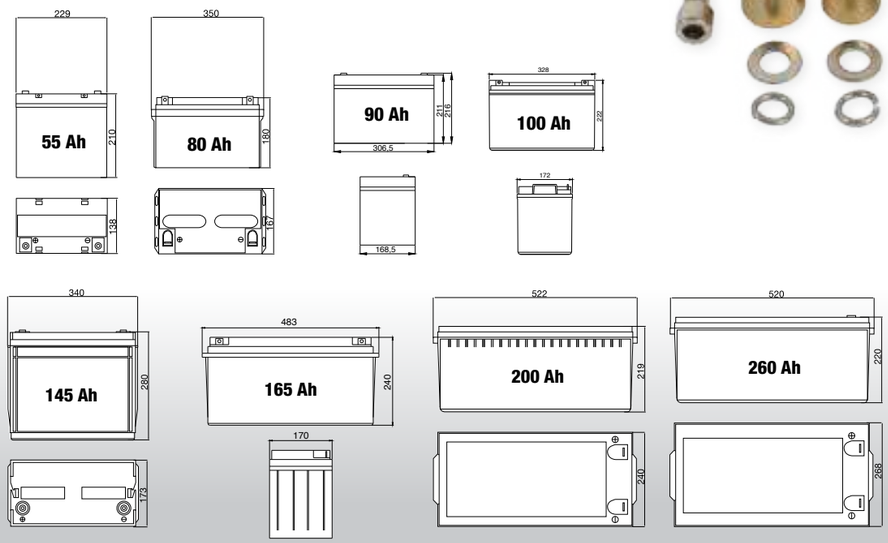

Deep cycle
GEL batteries - 12 V

Our GEL batteries are the most reliable and powerful batteries available on the market. You can choose between two types: a 12 V battery, suitable for battery banks up to approximately 700 Ah (12 or 24 VDC) and individual 2 V cells, which are suitable for building into one solid battery bank 2000 Ah at 12, 24 or 48 VDC.

The difference between GEL and AGM batteries

- In GEL batteries the electrolyte is absorbed by a sort of GEL rendering the battery stronger and more robust
- GEL provide better heat dispersion (conduction) than Absorbed Glass Mat (AGM)
- GEL batteries have a longer life span (greater charge-/discharge cycle)
- 12 V GEL batteries are the best option for frequently used electrical systems

The difference between 2 V GEL cells and 12 V GEL batteries

- 2 V cells are designed for daily deep charge-/discharge cycles
- 2 V cells are used in various industrial applications such as material transportation
- 2 V cells can withstand high peak loads (from electrical motors for example) and high charge currents
- 2 V cells have tubular plates instead of flat plates resulting in very high power density
- 2 V cells go up to 2000 Ah
- No voltage drops or unequal charging when connected in series / parallel
- The cells are delivered with industrial “pre-fab” cables

For 2 V cells specifications, see page 86

Technical specifications 12 V GEL-batteries

	GEL 100 Ah	GEL 145 Ah	GEL 180 Ah	GEL 225 Ah
Article Nr.	40290070	40290071	40290072	40290073
TECHNICAL SPECIFICATIONS				
Nominal capacity (C20)	100 Ah	145 Ah	180 Ah	225 Ah
Nominal voltage	12.0 VDC	12.0 VDC	12.0 VDC	12.0 VDC
Type	Deep discharge GEL battery with potential 12 year life span on float voltage. Superior design for frequent discharge cycles under extreme temperatures. Strong grid construction ensures increased reliability with frequent deep discharge. More than 400 cycles possible with complete discharge (100% DOD). Extra durable cyclic performance and high recovery efficiency - ideal for marine, mobile and solar energy systems as well as intensively used emergency / back up energy energy systems			
Weight ± 10%	30.0kg	44.0kg	53.0kg	65.0kg
Dimensions lxwxh (mm) (excl. poles)	328×172×222	340×173×280	530×209×214	522×240×219
Terminal type	M8 rvs	M8 rvs	M8 rvs	M8 rvs
Number of cells	6	6	6	6
CHARGE / DISCHARGE PARAMETERS				
Constant charge voltage (IU, float)	13.60 .. 13.80 VDC at 25ºC			
Cyclic charge voltage (IUU, absorption)	14.25 .. 14.60 VDC at 25ºC			
Maximum recommended charge current (higher possible)	20.0 A	20.0 A	36.0 A	45.0 A
Temperature ratio	-4mv/cel/°C	-4mv/cel/°C	-4mv/cel/°C	-4mv/cel/°C
Discharge voltage	1.75 VDC @ (A) ≤ 0.2ºC • 1.70 VDC @ 0.2 ºC (A) ≤ 1.0ºC			
Full discharge (100% DOD)	1.65 VDC @ (A) ≥ 1.0ºC			
NOMINAL CAPACITY AT 25°C	UP TO 1.75 VDC/CEL	UP TO 1.75 VDC/CEL	UP TO 1.80 VDC/CEL	UP TO 1.80 VDC/CEL
20 hours discharge	100.0 Ah	145.0 Ah	180.0 Ah	225.0 Ah
10 hours discharge	95.0 Ah	136.0 Ah	169.0 Ah	209.0 Ah
5 hours discharge	84.0 Ah	117.0 Ah	146.0 Ah	181.0 Ah
Peukeurt Coefficient	1.21<P<1.24	1.21<P<1.24	1.21<P<1.24	1.21<P<1.24
Usage at 25 A discharge	165 min	261 min	341 min	450 min
Self discharge	Less than 3% per month at 25°C			
Storage time	GEL batteries can be stored for up to 6 months at 25°C, recommended to charge before use			
BATTERY PARAMETERS				
Inrush Current at 25°C (5s)	1000 A	1450 A	1800 A	2250 A
Cyclic life at 80% discharge	600	600	600	600
Internal resistance (approx.)	7.5mΩ	5.0mΩ	6.0mΩ	4.0mΩ

Discharge effect on battery life

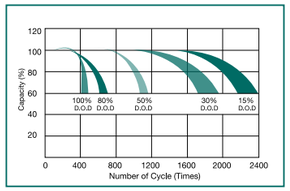

Storage Effect

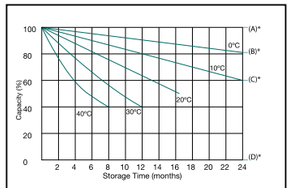

*(A) Supplementary charge required (Carry out supplementary charge before use if 100% capacity is requires)
*(B) Supplementary charge required before use. This supplementary charge will help to recover the capacity and should be made as early as possible
*(C) Supplementary charge may often fail to recover the capacity. The battery should never be left standing till this state is reached
*(D) Supplementary charge and storage guidelines

Discharge curves

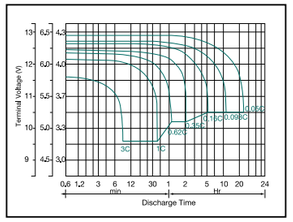

(battery terminals) optional

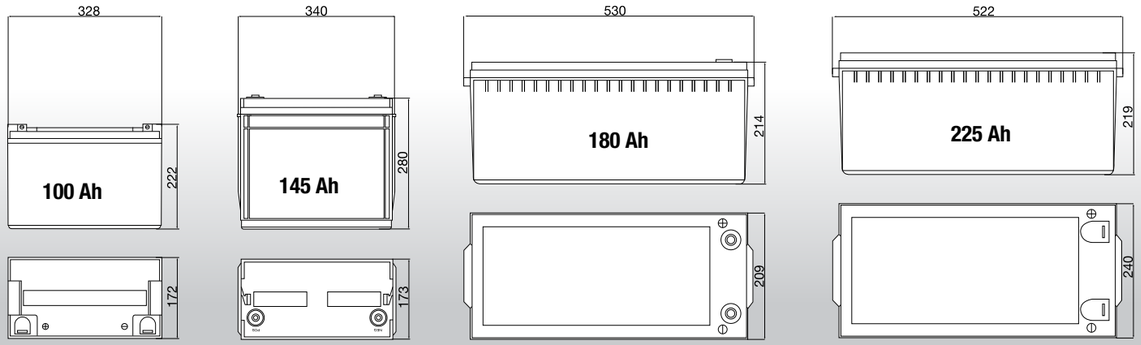

Multi cycle
2 volt Cells

Whilst vertical installation is recommended, 2 V GEL cells can be installed up to 30 degree angle. Horizontal installation is not allowed. Shown below is a 1650 Ah (24 V) underfloor battery bank installed in the middle (central point) of a motor yacht. Weighing approximately 1.5 tonnes it is ideally positioned in terms of balance with its weight at the lowest possible point. Cables to connect the individual 2 V cells together are supplied as standard.

Recommended Use

- For both 2 V and 12 V GEL batteries:
- Charge according to three step process (IUoUo) (see page 69 and 75)
- Keep battery connected to the charger even when not in use
- Use the temperature sensor to monitor the temperature of the battery
- Use alternator only on 'float voltage'
- Fit with ACR regulator as alternator will charge the battery faster and to 100%

GEL batteries - 2 V cells - forklift truck / traction quality

- Designed to last for over 10 years
- Suitable for high charge current (50% of nominal capacity)
- Ideal battery for large battery banks (600 to 8000 Ah)
- Best option for intensively used heavy duty inverter(s)
- Suitable for a large number of charge cycles (1200 to 3000 depending on discharge level)
- 7 year warranty (Restricted to cycles)

Ready to use, link cables

Underfloor 1650 Ah (24 V) battery bank

2 V cells

Technical specifications 2 V GEL

	2 V GEL 210 Ah	2 V GEL 440 Ah	V GEL 525 Ah	2 V GEL 750 Ah	2 V GEL 1000 Ah	2 V GEL 1250 Ah	2 V GEL 1500 Ah	2 V GEL 1650 Ah
Article Nr.	40290035	40290037	40290038	40290040 *	40290041 *	40290042 *	40290043	40290044
TECHNICAL SPECIFICATIONS								
Nominal capacity (C10, cel 1.80 V, 20°C)	210 Ah	440 Ah	525 Ah	750 Ah	1000 Ah	1250 Ah	1500 Ah	1650 Ah
Nominal voltage	2 VDC	2 VDC	2 VDC	2 VDC	2 VDC	2 VDC	2 VDC	2 VDC
Type	WhisperPower OPzV valve regulated batteries are ideally suited for applications with extended deep charge / discharge cycles. They are fully maintenance free. WhisperPower GEL batteries are constructed using tubular plate technology, wherein the electrolyte is contained in the GEL. They are widely used in emergency / back-up power supplies, marine and mobile battery banks and UPS installations.							
Weight ± 10%	18.0kg	33.0kg	39.0kg	50.0kg	68.0kg	82.0kg	97.0kg	120.0kg
Dimensions lxwxh (mm) (excl. poles)	145×206×390	145×206×506	166×206×506	145×206×667	191×210×668	233×210×670	275×210×669	275×210×820
Terminal type	2 × M8	2 × M8	2 × M8	2 × M8	4 × M8	4 × M8	4 × M8	4 × M8
CHARGE / DISCHARGE PARAMETERS								
Bulk charge voltage (V/cel)	2.42 VDC at 20°C							
Float voltage (V/cel)	2.25 VDC at 20°C							
Initial charge current (A)	80 A	150 A	200 A	240 A	320 A	400 A	480 A	600 A
Temperature ratio	-4mv/cel/°C							
Recommended discharge voltage for 10 hours discharge (V/cel)	1,80 VDC/cel							
Recommended discharge voltage for 1 hour discharge (V/cel)	1,65 VDC/cel							
NOMINAL CAPACITY AT 20°C	UP TO 1.80 VDC/CE	UP TO 1.80 VDC/CE	UP TO 1.80 VDC/CE	UP TO 1.80 VDC/CE	UP TO 1.80 VDC/CE	UP TO 1.80 VDC/CE	UP TO 1.80 VDC/CE	UP TO 1.80 VDC/CE
10 hours discharge	210 Ah	440 Ah	525 Ah	750 Ah	1000 Ah	1250 Ah	1500 Ah	1650 Ah
5 hours discharge	180 Ah	370 Ah	450 Ah	650 Ah	865 Ah	1085 Ah	1305 Ah	1355 Ah
1-hour discharge	88Ah	184 Ah	220 Ah	314 Ah	489Ah	570 Ah	629Ah	647Ah
Peukeurt Coefficient	$1{,}21 < P < 1{,}23$							
Usage at 25 A discharge	8h	15h	18h	24h	32h	40h	48h	60h
Self discharge	Less than 3% per month at 20°C							
Storage time	OpzV batteries can be stored for up to 6 months at 20°C, recommended to charge before use							
BATTERY PARAMETERS								
Cyclic life at 80% discharge	1250	1250	1250	1250	1250	1250	1250	1250
Internal resistance (approx.)	0,60mΩ	0,42mΩ	0,38mΩ	0,35mΩ	0,29mΩ	0,24mΩ	0,22mΩ	0,19mΩ

* Stock items

Article Nr.	Article
40290101	Connection strip set GEL Power 2 V for 12 V tot 750 Ah*
40290103	Connection strip set GEL Power 2 V for 12 V / 1000 Ah*
40290105	Connection strip set GEL Power 2 V for 12 V / 1250/1500/1650 Ah*

* For 24 V configuration 2 connections sets are required

- **7 year warranty (pro rata)**
- **3500 cycles at 50% discharge**
- **Ah rating based on C10**

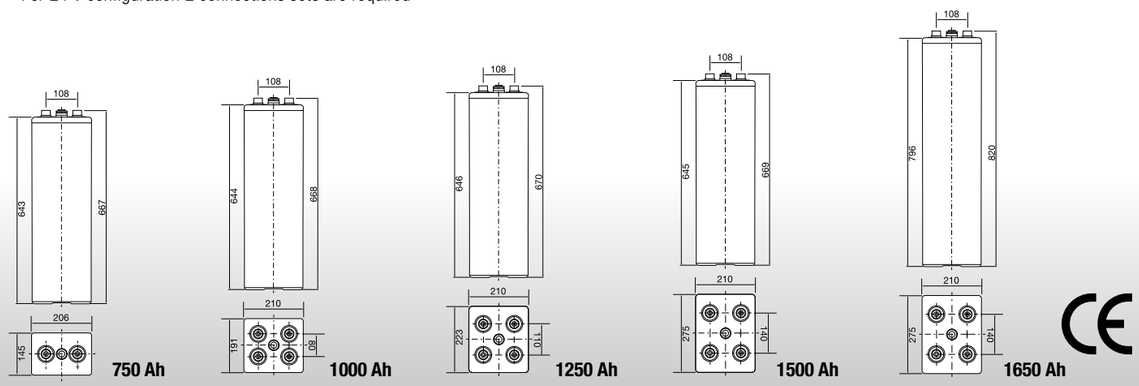

Go to www.whisperpower.com for the complete measurements

Premium Lithium-ion batteries
from small to large systems

Over the last 20 years, this kind of battery has become incredibly popular thanks to the use of electric cars. The battery capacities have increased and there has been a significant rise in their use on board of vessels or in vehicles in recent years. WhisperPower has the right type of Lithium-ion battery for every application.

WhisperConnect /CAN connection
- Easy accessible communication ports
- Plug-and-play connections between batteries and WIB box
- Connectable in a direct way via WIB box to WP Touch panels

Battery monitoring
- Connection for WhisperPower TOUCH 7 inch
- Simple integration into complete WhisperPower system
- 5 inch Touch Battery Monitor optional
- Remote read-out via Whisper Care

Technology
- Lithium Iron Phosphate battery technology
- LiFePO4 cells of the highest quality used
- As a result perfect thermal stability and safety
- Short circuit proof
- Passive safety, even without electronics the batteries remain safe
- Integrated electronics for cell balancing

Models & Battery Sizing
- Step in model 12 VDC 90 Ah, 1.2 kW
- Next model 12 VDC 160 Ah, 2.3 kW
- Parallel connection to create large 12 VDC banks (90 Ah model only 12 V)
- Series connection to create large 24/48 VDC banks (160 Ah models only)
- Communication cables to keep batteries in balance
- Battery monitoring: wizzard over internet, remote 5 inch TOUCH panel optional

Features
- Long life time > 5000 cycles
- Deep cycle, DOD 90%
- Fast re-charge, up to 100 % of Ah capacity
- Higher ambient operating temperatures allowed
- Small and light weight, 3 times less than lead acid batteries
- Made in the Netherlands

WIB Interface
- Optional WhisperInterface Box with control board for switching between multiple batteries
- 2 x 95mm2 connections per battery pole
- Integrated fuse, 32 V-500 A
- Can be 100% discharged
- Can be charged with 100% of the Ah capacity
- CANOpen port as standard for interfacing / monitoring

Robust casing, accessible connectors
- Specially designed casing for extreme environments
- Flexible adaptive Casing technology applied
- BMS electronics integrated, protected against moisture
- Heavy duty battery terminals and easy accessible fuse
- Batteries can be fixed on floor

Modular DC Distribution Assembly
- Essential heavy duty DC connectors
- To be mounted between battery bank and DC Consumers
- Includes high current busbars and fuseholders and fuses
- Option: integration of the BMS electronic device (see picture)

ION Power Plus
12 VDC / 160 Ah

Lightweight Lithium Ion Traction battery, 59.3 lb / 26.9 kg. Suitable to configure powerful 24 or 48 VDC battery banks. Supplied with all necessary accessories.

Features

- Long Life traction battery
- Lithium Iron Phosphate (LiFePO4)
- Most safe lithium technology today
- Superior abuse tolerance
- Integrated BMS (Battery Management System)
- Glass fibre reinforced plastic (GRFP) casing, aluminium / PE sandwich side panels
- 2 x 95mm² wire connection per terminal
- Integrated fuse, 70V / 500A
- WhisperConnect interface for battery monitoring
- Battery monitoring / historical / time remaining
- Adaptive cell balancing
- Serial string equalisation
- Can be used as starter battery as well
- Serial connection 24/48/96/ VDC

ION Power Plus
12 VDC / 90 Ah

For new install or lead-acid replacement, BMS included, no need to install external safety relay or WIB Box. Battery monitoring access by BlueTooth.

Features

- Long life traction battery
- One on one replacement for AGM/GEL lead acid batteries
- Lithium Iron Phosphate (LiFePO4): safe lithium technology
- Superior abuse tolerance
- Integrated short circuit protection
- Built-in discharge protection
- Integrated BMS
- Fast charging 100% of nominal capacity
- Compatible with WhisperPower battery chargers, Combi's and Solar Charge controllers
- WP – BS battery charger / booster from DC alternator to battery optional
- WhisperConnect /CAN open and Bluetooth interface for battery monitoring
- Battery monitoring / historical / time remaining
- Adaptive cell balancing
- Not suitable for use as starter battery

Optional

WP – CB battery charger booster, for correct charging of the Lithium batteries from the DC alternator

Optional

Wide range of 12, 24 and 48 VDC battery chargers following the correct charge characteristic

	WP ION 12 V 90 Ah	WP ION 12 V 160 Ah
Article Nr.	40290201	40290202
TECHNICAL SPECIFICATIONS		
Battery NR code	4IFP227/415/315	4IFP227/415/315
Height (mm)	190	313.00/314.00
Width (mm)	175	413.50 / 414.50
Depth (mm)	353	225,00 / 226.00
Weight	12.5kg	28.3kg
Nominal voltage (V)	13.2 V	13.2 V
Maximum voltage	15.4 VDC	15.4 VDC
End charge voltage	14.6 VDC	14.6 DC
Max charge current 100/c	100 A	160 A
Max float charge current	30 A	52 A
Minimum battery voltage	8 VDC	8 VDC
Minimum float charge	10 VDC	10 VDC
Max discharge current 3/C	200 A	480 A
Prolonged discharge current (max)	30 A	52 A
Pulsed discharge current (10 sec)	600 A	1280 A
Pulsed discharge current (60 sec)	400 A	800 A
Usable battery capacity at 20˚C	90 Ah/ 1200 Wh	160 Ah/ 2112 Wh
Usable battery capacity at - 20 ˚C	65 Ah/ 858 Wh	104 Ah/ 1372 Wh
Usable capacity / in comparison to lead acid battery	160 Ah	320 Ah
Charge method	3-step or const. voltage	Constant voltage
Temperature range (charging)	0°C to 45°C	
Temperature range (discharging)	-20°C to +60°C	
Temperature range (storage)	-20°C to +60°C	

12 Volt - 160 Ah system

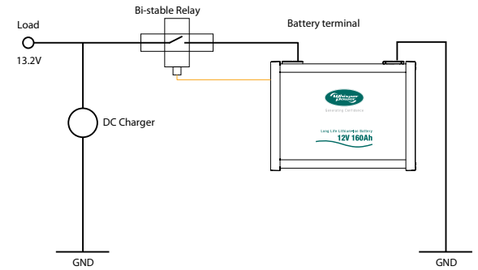

12 Volt - 320 Ah system

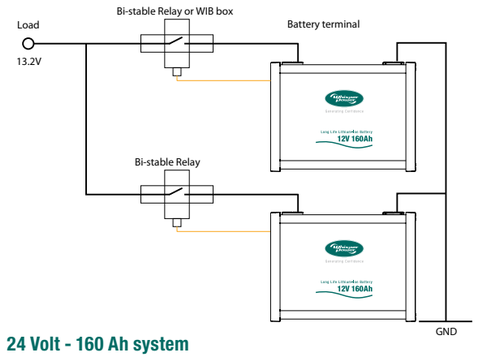

24 Volt - 160 Ah system

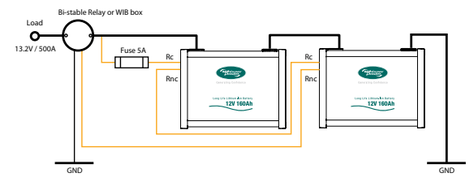

Lithium Ion batteries Power Plus accessories

	LI-ION BATTERIES - TECHNOLOGY: LIFEPO4 (LITHIUM ION IRON PHOSPHATE) - FOR 12/24/48 VDC SYSTEMS
Article Nr.	**Definition**
50214814	WP Power Plus Whisper Interface box WIB 12V / 350A
50214816	WP Power Plus Whisper Interface box WIB 24V / 350A
50214817	WP Power Plus Whisper Interface box WIB 24V / 600A
50214818	WP Power Plus Whisper Interface box WIB 48V / 350A
50214819	WP Power Plus Whisper Interface box WIB 48V / 600A
40290253	WP Power Plus Relay 9-36V / 500A
40290254	WP Power Plus Relay 12-42V / 190A Bi-stabile relay + cable 1 meter
40290255	WP Power Plus CAN bus cable 0.6 meter
40290256	WP Power Plus CAN bus Power cable
40290257	WP Power Plus CAN bus splitter
40290258	WP Power Plus CAN bus terminator female
40290259	WP Power Plus CAN bus terminator male
40290340	WP Power Plus CAN bus cable to whisper connect
40290346	WP ION Power Plus, bracket kit 12V 160 Ah

Smart Battery monitoring

A look inside the battery

When putting together a DC installation for a boat or yacht, there is more to take in to consideration than just the correct choice of battery and associated charging systems. All sorts of other items can have something to do with the battery or are connected to it and can significantly impact the end result.

Battery usage indicator - knowledge is power

The WBM is a universal battery monitor that displays the status of the battery with very high precision. Via the display, the following information is brought up:

- The main battery voltage (V)
- The power consumption indicated in ampere-hours (Ah)
- Power consumption in amperes (A)
- Charge current of battery charger, combi, solar panels, windmills, etc. (A)
- Battery capacity in %
- Remaining battery capacity and “time remaining” in minutes and hours (Pro Series)

The WBM provides a look ‘inside’ the battery and is essential for preserving long battery life.

Three versions

The WBM Basic version is identical to the PRO version, only without the “time remaining” indicator in hours and minutes. The PRO-HV is suitable for DC systems up to 70 VDC.

Automatic start function

The WBM can also be used as a means of automatically starting a DC or AC generator, based on the battery voltage or battery condition. This is achieved via RS 232 communication (order RS 232 option) Please note that your generator must be suitable for this function. WhisperPower generators are equipped with an automatic start / stop adjustment kit as standard.

Remote communication

The WBM, fitted with the RS 232 option, can be used to remotely monitor power systems using a GSM or an internet connection.

Go to page **12** for our Touch panels, which include smart battery monitoring.

Technical specifications WBM - Battery monitors

		WBM-BASIC	WBM-PRO	WBM-PRO HV
Article Nr.		40290310	40290311	40290312
TECHNICAL SPECIFICATIONS				
Supply voltage range		9 .. 35 VDC	9 .. 35 VDC	14.. 70 VDC
Supply current [1]	at 24 VDC	7 mA	7 mA	5 mA (at 48 VDC)
	at 12 VDC	9 mA	9 mA	6 mA (at 36 VDC)
Input Voltage range (auxiliary battery)		2 .. 35 VDC	2 .. 35 VDC	2 .. 35 VDC
Input Voltage range (main battery)		0 .. 35 VDC	0 .. 35 VDC	0 .. 70 VDC
Input current range ampere [2]		-999 .. +999A	-999 .. +999A	-999 .. +999A
Battery capacity (min.. max)		20 .. 999Ah	20 .. 999Ah	20 .. 999Ah
Operating temperature		-20 .. +50°C	-20 .. +50°C	-20 .. +50°C
Readout accuracy:	voltage	± 0.1V (0 .. 35 V)	± 0.1V (0 .. 35 V)	± 0.1V (0 .. 70 V)
	current	± 0.1A (0 .. 100 A)	± 0.1A (0 .. 200 A)	± 0.1A (0 .. 200 A)
	current	± 1A (100 .. 999A)	± 1A (200 .. 999A)	± 1A (200 .. 999A)
	battery capacity	± 0.1Ah (0 .. 100 Ah)	± 0.1Ah (0 .. 200 Ah)	± 0.1Ah (0 .. 200 Ah)
	battery capacity	± 1Ah (100 .. 999Ah)	± 1Ah (200 .. 999Ah)	± 1Ah (200 .. 999Ah)
	start of charge (0..100%)	± 0.1%	± 0.1%	± 0.1%
	time remaining (0.. 24hrs)		± 1 min	± 1 min
	time remaining (24.. 240hrs)		± 1 h	± 1 h
	temperature (-20 .. +50°C) [3]		± 0.5°C	± 0.5°C
Voltage measurement accuracy		± 0.3%	± 0.3%	± 0.3%
Current measurement accuracy		± 0.4%	± 0.4%	± 0.4%
Housing material		ABS	ABS	ABS
Colour		RAL 7021 black grey	RAL 7021 black grey	RAL 7021 black grey
Dimensions: diameter front panel / cylinder		ø 64 mm / ø 52 mm	ø 64 mm / ø 52 mm	ø 64 mm / ø 52 mm
total depth / weight		79 mm / 95 g	79 mm / 95 g	79 mm / 95 g
Shunt dimensions:	base	45 × 87 mm	45 × 87 mm	45 × 87 mm
	height	17 mm (basis) /	17 mm (basis) /	17 mm (basis) /
		35 mm (cable connector)	35 mm (cable connector)	35 mm (cable connector)
	weight	145 g	145 g	145 g
International Protection rating		IP20 (front panel IP65)	IP20 (front panel IP65)	IP20 (front panel IP65)

[1] measured with backlighting and alarm relay switched off
[2] Subject to selected shunt. With 500 A/50mV shunt (350 A continuous) delivered as standard the range is -600..+600 A
[3] Only available if optional temperature sensor is connected

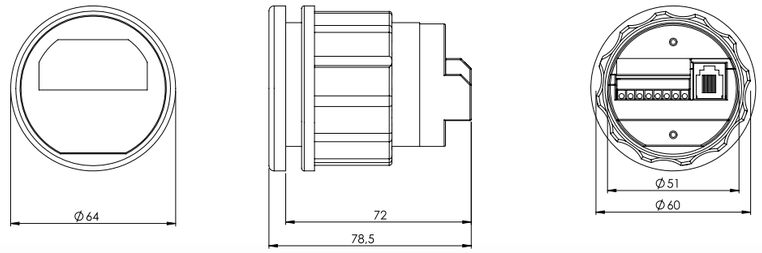

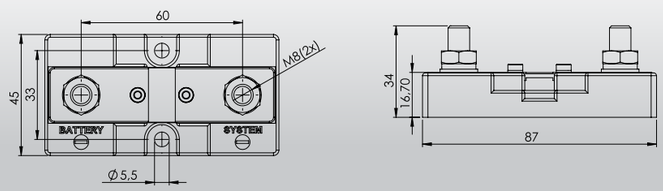

Monitoring and Control
In a single glance!

WhisperPower provides remote panels as standard, enabling the various pieces of equipment to be remotely controlled and monitored. With the WP Touch series it is possible to view all of the electrical system's vital information on one screen.

From the panel, the WhisperPower generator, the sine wave inverter / charger combination and the batteries can all be monitored and operated. If there is already a central panel installed, for example for the navigation, we also offer the possibility of using the existing panel to monitor the WhisperPower system via an interface.

WP Touch: Three sizes available

The WP Touch panel is available in 5 , 7 and 9.7 inches. This high resolution, full colour panel comes complete with cables and connectors for connection to the inverters / battery chargers and if also installed, the WhisperPower generator.

Main Menu

- Choose from ENERGY, GENERATOR and SETTINGS
- The WPC's and AC/DC PowerCubes most important settings can be programmed using the touch panel

Battery Monitoring

- Battery voltage (V) and current consumption in amperes
- Activated charge current (charger, alternator, solar panels)
- "Time remaining" indication showing the time the battery can be utilized
- Ampere consumption (Ah)
- WhisperPower Generator start battery voltage indication

WHISPER CONNECT COMPATIBLE

General & technical information WhisperTouch Panels

	WP TOUCH 5 Inch	WP TOUCH 7 Inch	WP TOUCH 9.7 Inch
Article Nr.	40280100	40280101	40280102
TECHNICAL SPECIFICATIONS			
Input voltage	10-30 VDC		
Power consumption	from 100 to 240 mA		
Dimensions h x w *	110 mm x 150 mm	139 mm x 207 mm	200 mm x 250 mm
Installation depth	42 mm		
Weight	250 gr	300 gr	500 gr
Operating temperature	- 25 C tot 55 C		
Installation advice	for interior use		
Scope of supply	Touch panel, RS232 connection for WPC 232 -i, RJ 45 converter / cable for WhisperPower generator, installation manual		
Compatible:	Yachtcontrol, Empirbus		

* Outside dimensions

Dimensions and installation information

5 inch

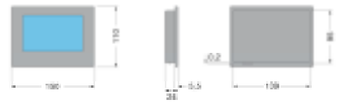

7 inch

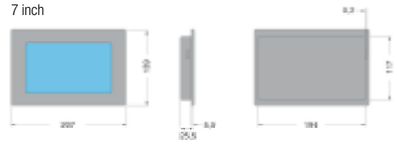

9.7 inch

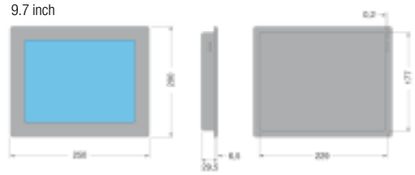

Ask for our **Wifi Router** for remote monitoring

Accessories

Art. Nr.	Product
40290350	Whisper Connect terminator
40290351	Whisper Connect Patch Cable 0.5 mtr
40290352	Whisper Connect Patch Cable 1.5 mtr
40290353	Whisper Connect Patch Cable 3 mtr
40290354	Whisper Connect Patch Cable 6 mtr
40290355	Whisper Connect Patch Cable 10 mtr
40290356	Whisper Connect Patch Cable 15 mtr
40290357	Whisper Connect Patch Cable 25 mtr
40290358	Whisper Connect Patch Cable 100 mtr
40290365	Whisper Connect Diy Patch Cable Kit (do it your self)

Generator screen

Settings

Inverter / battery charger screen with battery monitoring

Remote Control and monitoring: inverter / battery charger WPC & Battery

- Switch the entire inverter system On/Off
- Charger-only - the inverter is not activated if shore power is switched off or cuts out
- Advanced battery monitoring
- Set shore power amperage
- Inverter status indicator
- Battery charger status indicator
- AC power input voltage
- AC power output voltage

Control and monitoring of the WhisperPower generator

- Start/stop including ignition period
- Set automatic start - based on DC voltage
- Indication of starter battery condition
- Current (A), voltage (V), frequency (Hz) read outs
- Time to Service indication
- Logged running hours

WhisperPower Solar Panels

For cases when energy consumption is limited, purchasing and installing solar panels can be a good solution for providing onboard electrical power. The actual yield is determined by the type of panel, its dimensions, the geographical location of the boat and the position of the panel in relation to the sun.

In general, solar panels are used as the power source for basic power requirements and maintenance of the battery. If a shore power connection is not available, the solar panels act as the means to keeping the battery under voltage. The yield of the pannels is specified in Watts-peak. This is the maximum power and not a constant output. Visit: re.jrc.ec.europa.eu/pvgis/apps4/pvest.php to calculate the yield of a panel.

We only use industrial grade cells guaranteeing long life and high efficiency

For a complete system, WhisperPower delivers the following solar panels

Flexible panels with walkable top layer from 50 to 100 Wp

- For fixed mounting (sealant) on deck or dockhouse
- Or mounting on railing or rigging (fixing eyes)
- No rear ventilation necessary
- Panels can be walked on

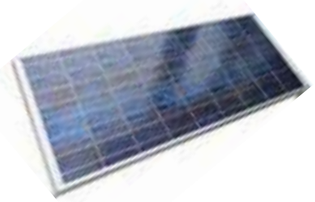

Rigid panels with glass top layer

- Monocrystalline or polycrystalline technology
- For fixed mounting in a frame
- 80, 185 and 285 Wp models
- Rear ventilation required
- Cannot be walked on
- MPPT controller available

Solar Charge Controller (next pages)

- Install between panel and battery
- SunTrack regulators with and without MPPT technology
- MPPT= Maximum Power Point Tracking converting extra voltage in to charge current. Increases system efficiency by approximately 30%
- Three step charge process from 15 Amps so suitable for AGM and GEL batteries
- SunTrack 40, 60 and 80 Amp models also suitable for Lithium-ion batteries

AVAILABLE AUTUMN 2018

Mounting Assistance

- Cable sets from battery to panel
- Mounting kit
- Fixing brackets for mounting on roof

Semi-Flexible Panel WhisperSolar Flex 50 & 100 Watt

Monocrystalline modules with thin, light weight and compact cells. Panel can be bent with a maximum radius of 10 cm. These panels are designed for marine applications and are therefore, wind, water and corrosion resistant. Ideal for charging an onboard 12 or 24 V battery. The cells are made by Bosch (Germany). Both panels are supplied with a single-stage regulator. When used for charging AGM or GEL batteries, we recommend installing a multi-stage regulator. The WhisperSolar Flex panels are fitted with fixing eyes for attachment to rails, stays etc.

Whisper Solar panels for fixed mounting

The non-flexible panels for permanent installation are extensively used in homes and buildings. The price per watt / peak is much more favourable than the specialist "walk on" panels such as the Flex 50 and 100 watts. The range is made in Europe by a high level manufacturing company. The product range is of very high-quality and meets the highest standards.

General features solar panels

- Quality panels from European, or Asian manufacturers
- Power ranges: 80, 185 Wp, 285 WP
- Available in: All Black monocrystalline or blue polycrystalline panels
- The panels conform to important standards such as VDE and MCS, and can withstand salt air

Technical specifications Whisper Solar panels

	50 WATT PANEL	100 WATT PANEL
Article Nr.	60110403	60110407
TECHNICAL SPECIFICATIONS		
Model name	WhisperSolar Flex 50	WhisperSolar Flex 100
Power rating	50 Wp, 2.8A	100 Wp, 5.6A
Nominal voltage	12 VDC	12 VDC
Cell Type	Monocrystalline	Monocrystalline
Maximum voltage	17.8 VDC	17.8 VDC
Temperature range	from -20 to 80 °C	from -20 to 80 °C
Dimensions l x w	76 x 53 cm	109 x 57 cm
Weight		
Maximum bend radius	10 cm	10 cm
Cable length		
Module thickness	1.7 cm	1.7 cm
Life span	> 10 years	> 10 years
Warranty	2 years	2 years
Voltage regulator	1 step regulator (as standard), 3 steps available (optional)	

Datasheets available

	80 WATT PANEL	185 WATT PANEL	285 WATT PANEL
Article Nr.	60110400	60110402	60110408
TECHNICAL SPECIFICATIONS			
Model name	Whisper Solar 80	Whisper Solar 185	JA Solar
Power rating	80 WP	185 WP	285 WP
Voltage	12 VDC	12 VDC	24 VDC
Maximum voltage	22 - 32 VDC	21.5 VDC	39.07 VDC
Cell Type	Monocrystalline	Monocrystalline	Monocrystalline
Temperature range	from -40 to 85 °C	from -40 to 85 °C	from -40 to 85 °C
Dimensions l x w	1000 x 510 mm	1480 x 670 mm	1650 x 991 mm
Weight	8 kg	15 kg	18.2 kg
Panel thickness	35 mm	35 mm	40 mm
Connection	Box on panel	Box on panel	Box on panel
Cable ∅	3 mm	3 mm	4 mm
Life span	> 20 years	> 20 years	> 20 years
Voltage regulator (optional)	Suntrack PWM	Suntrack MPPT	Suntrack MPPT

WhisperPower charge Controllers

SunTrack, the WhisperPower Solar Charge Controller, forms an important link between the solar panel(s) and the battery(s). The SunTrack controllers ensure maximum efficiency and a safe charge voltage for the battery. There is a choice of a number of power outputs and two types of technology:

Solar Charge Controllers

The WP-SCC PWM controller is the "cost effective", entry level controller with 1 or 3 stage charge characteristics. The controller ensures that the irregular voltage from the panel is converted into a stable charge voltage. In general, this is used for systems with 1 panel.

The WP Suntrack MPPT controllers are designed for 12 or 24 V Solar systems > 200 WP.

WP-SC Whisper Solar Charge controllers

- Suitable for every type of battery: GEL, AGM or open lead
- Plug and play connectors for panel, battery and 12 V load
- Automatic shut down if battery voltage (too) low
- Can feed up to 20 amps/ 450 Watts solar power to the batteries
- Temperature compensation as standard
- LEDs battery indicator and load status

	PWM SUNTRACK 10	PWM SUNTRACK 20
Article Nr.	60110409	60110411
DC INPUT		
Max. PV Voltage	26 V	26 V
Max. PV Current	10 A	20 A
Voltage across PV & Battery	<0.15 V	
DC OUTPUT BATTERY		
Battery Rating	12 V	
Battery Type	Sealed/Flooded	
Max. Charge Current	10 A	20 A
Charge Voltage Range	14.2 - 14.6 V	
Float Voltage Range	13.4 - 13.8 V	
Parasitic Current	<10 mA	<15 mA
DC OUTPUT (LOAD)		
Load Current (continuous)	10 A	20 A
PROTECTION		
PV Reverse Polarity	Protected	
Battery Overcharge	Yes	
Load Over-Discharge Voltage	<11.5 V	
Load Reconnected Voltage	12.6 V	
Built-in Temperature Sensor	Yes, temperature compensation on charging voltage	
INDICATOR		
Indicators	Charging/Load Disconnect LED Indicator	
ENCLOSURE		
Input/Output Connection	Heavy duty terminals	
Weight	0.2 kg	0.2 kg
Dimensions	100mm x 100mm x 33mm	

Suntrack MPPT

The SunTrack MPPT controller (MPP stands for Maximum Power Point Tracker) works to get the most out of the solar panels by converting the majority of the yield in to battery power. Several high frequency panels (up to 600 VDC) can be connected to these controllers creating a powerful generator with maximum efficiency. In general, this is used for systems with several panels, for example, on the roof of a large truck.

	WP SUNTRACK 40		WP SUNTRACK 60			WP SUNTRACK PRO 80*		
Article Nr.	60110435		60110436			60110421		
ELECTRICAL CHARACTERISTICS PV ARRAY SIDE								
Nominal battery voltage	12 V	24 V	12 V	24 V	48 V	12 V	24 V	48 V
Maximum Solar power 12V	600 W		900 W			1250 W	2500 W	5000 W
Maximum Solar power 24V	1200 W		1800 W			80 VDC	150 VDC	
Maximum Solar operating voltage	100 VDC		150 VDC			75 VDC	145 VDC	
Minimum Solar operating circuit Voltage	above battery voltage							
ELECTRICAL CHARACTERISTICS BATTERY SIDE								
Maximum Output Current	40 A		60 A			80 A		
Nominal Battery Voltage automatic/manual set	12 or 24 VDC		12, 24 or 48 VDC			12, 24 or 48 VDC		
Operating voltage range	above battery voltage, minimum 7 V							
PERFORMANCE OF THE DEVICE								
Power Conversion efficiency (in a 48 V typical-system)	>97.5%		>99%			>99%		
Maximum Stand-By Self-Consumption (48 V)	25 mA > 1.2 W							
Maximum Stand-By Self-Consumption (24 V)	30 mA > 0.8 W							
Maximum Stand-By Self-Consumption (12 V)	35 mA > 0.5 W							
Charging stages	6 stages: Bulk, Absorption, Float, Equalization							
Battery temperature compensation	-3mV / ˚C / cell (25˚C ref) default value adjustable -8 to 0 mV / ˚C							
ELECTRONIC PROTECTIONS								
PV reverse polarity	Yes		Yes			up to -150 VDC		
Battery reverse polarity	Yes		Yes			up to -150 VDC		
Battery overvoltage	Yes		Yes			up to -150 VDC		
Over temperature	Yes		Yes			Protected		
Reverse current at night	Yes		Yes			Prevented by relays		
ENVIRONMENT								
Operating Ambiant Temperature Range	-30 to 60˚C					-20 to 55˚C		
Humidity	tot 96%					100%		
Ingress Protection of enclosures	IP22					IP54, IEC/EN 60529:2001		
Mounting location	interior					interior		
GENERAL DATA								
Warranty	2 years		2 years			2 years		
Weight	1.1 kg		1.3 kg			5.5 kg		
Dimensions h x w x l (mm)	187x132x73mm		250x180x93mm			120x220x350mm		
Parallel operation (separated PV arrays)	no		no			yes		
Max wire size	25 mm^2		35 mm^2			35 mm^2		
Glands	-		-			M20 x 1,5		
COMMUNICATIONS								
Network Cabling	RS485		RS485			communication bus		
Remote Display and Controller	-		-			RCC-02 or WP-Touch		
Menu languages	English		English			English/French/German/Spanish		
Data Logging	-		-			With RCC-02/03 and SD card		
CONFORMITY								
CE compliant	EMC 2004/108/CE LV 2006/95/CE RoHS 2002/95/CE							
Safety	IEC/EN 62109-1:2010							
EMC (Electro Magnetic Compatibility)	IEC/EN 61000-6-3:2011 IEC/EN 61000-6-1:2005							

* Also available as WPSuntrack, 600 VDC, 3.5kW or 600 VDC, 7kW

WP-SunTrack Pro MPPT controllers

- Professional controller based on advanced MPPT technology
- Suitable for systems from 16 to 600 Volts DC, depending on type
- For charging 12,24 or 48 VDC
- 0.6 kW to 7 kW capacity, can be increased when used in parallel
- 98% efficiency with very low zero load (from 1 Watt)
- 80 A controllers can be connected to the WhisperPower central control panel: WhisperPower PSCP, combined with generator, RCC or WhisperTouch 5 or 7 inch panel
- Protected against water and moisture (IP65)

Power Distribution

Safe and reliable
Shore power connections

The shore power connection is one of the most important properties for pleasure craft or commercial vessels. This is the “life line” from the shore to the boat, ensuring that the technical equipment remains powered when not cruising.

A vital component of the shore power connection is the battery charger which recharges and maintains the voltage for the service, starter and the bow thruster batteries.

The WhisperPower battery charger or inverter / charger combi ensures that the battery remains in perfect condition throughout the whole year whilst also ‘buffering’ sufficient current to provide the various 12, 24 and/or 120/230 V electrical devices with power whilst on board. The next few pages cover the necessary installation components to ensure uninterrupted and safe connection to shore. All electrical thru-hull inlets have an LED indicator that turns on when the connection is successful.

Main ingredients for a reliable shore power connection

- Complete cable sets for shore to yacht / ship connection, 15 or 25 metres, 16 or 32 amps, complete with connectors / plugs
- Thru-hull stainless steel inlets
- Plugs to fit the inlets
- Cable storage case
- Industrial cable reel

Lifeline
from shore to ship

Cable sets with IEC 60309 plugs

For 16 A connection

For use up to	16 A / 250 V
Cable	H07BQ-F 3G1, 50 mm²
IP Rating	IP56
Certification	CE
LED Power indication	Yes
Art nr 50214751	15 metre length
Art nr 50214752	25 metre length
Storage bag	included

For 32 A connection

For use up to	32 A/250 V
Cable	H07BQ-F 3G6,00mm²
IP Rating	IP56
Certification	CE
LED Power indication	Yes
Art nr 50214741	15 metre length
Art nr 50214742	25 metre length

Plugs (standard with cable sets)

Features

For use up to	16 A / 250 V
IP Rating	IP56
Certification	CE
Article Nr.	50214688

Features

For use up to	32 A / 250 V
IP Rating	IP56
Certification	CE
Article Nr.	50214689

Accessories

- Cable set storage bag
- Cable reel - Prices and specifications on request

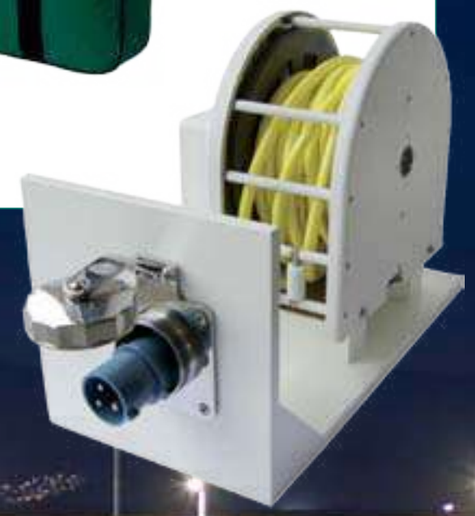

Thru-hull inlets

16 A Polyamide version

For use up to	16 A / 250 V
IP Rating	IP56
Certification	CE
Article Nr.	50214680

16 A Stainless Steel version

For use up to	16 A / 250 V
IP Rating	IP56
Certification	CE
Article Nr.	50214684

32 A Stainless Steel version

For use up to	32 A / 250 V
IP Rating	IP56
Certification	CE
Article Nr.	50214685

Power distribution

AC Power Distribution

To connect a yacht or ship safely to shore power a number of additional items are needed. Having just covered the actual shore connection, we will now look at the extra components needed to be installed on board.

- Galvanic separators in the form of a simple galvanic isolator or isolation transformer: see page 102
- Earth leakage protection in the form of a cabinet with breaker
- A fuse box or distribution system is necessary for extensive installations with AC power consumers connected directly to the shore power.
- If there are multiple AC power sources present, such as an inverter and generator, then it is recommended to install an automatic switching system.

The WhisperPower "All-in-One" systems and the WPC contain the various switching and distribution functions already integrated.

WhisperSwitch transfer system

The traditional WhisperSwitch systems regulate the power distribution between energy sources fully automatically.
AC and generator / inverter IN, 230/120 V onboard groups OUT, everything in one cabinet. The connected devices make use of the sources (maximum two) which are available at the time.

WhisperSwitch is available in the following versions:

- 2 inputs, for example shore / inverter or shore / generator with 1 output. Capacity 6kW/26 A at 230 V/50 Hz
- 2 inputs, for example shore / inverter or shore / generator with 1 output for consumers. Capacity 10 kW/42 A at 230 V/50 Hz
- 2 inputs, 1 output. Capacity 6kW/50 A at 120 V/60 Hz
- 2 inputs, 1 output. Capacity 10 kW/83 A at 120 V/60 Hz

AC Transfer Systems: 3 inputs

These analogue switching devices are able to feed the onboard power supply from three different sources: shore power, generator and inverter. There are three output circuits, available with different capacities. As an alternative solution, it is also possible to install two standard WhisperSwitches.

- switch from shore to generator
- switch between generator and inverter

Earth leakage protection

WhisperPower supplies plug and play earth leakage breakers for single and three phase systems. An earth leakage switch protects the electrical installation against leakage current preventing dangerous situations.

We supply the WP-ShoreConnect system as a plug and play solution: the shore power is connected on one side and the onboard installation on the other. See page 100 for the 100% safe solution with the WP-GI isolation transformer.

AVAILABLE ON REQUEST
WP-AC TRANSFER SYSTEM SWITCH
for 3 phase generator, inverter
for 25 and 32kW

WHISPERSWITCH	6 – 6 KW (2 X IN, 1 X OUT)	10 – 10 KW (2 X IN, 1 X OUT)	6 – 5 KW (2 X IN, 1 X OUT)	10 – 10 KW (2 X IN, 1 X OUT)
Article Nr.	50214670	50214671	50214672	50214673
TECHNICAL SPECIFICATIONS				
Nominal input voltage	230 V (50/60 Hz) *		120 V	120 V
Input voltage range	200-250 V		100-250 V	
No. of AC inputs	2 x (Shore/ Generator)			
No. of AC outputs	1			
Dimensions (h x w x d) in mm	240x140x100	240x210x100	240x140x100	240x210x100
Weight	1 kg	1,7 kg	1 kg	1,7 kg
TECHNICAL SPECIFICATIONS				
Nominal output current generator	26A	42 A	45 A	95 A
Nominal input current shore power	26A	42 A	45 A	95 A
Nominal output current inverter	25 A	32 A	45 A	95 A
Earth leakage switch	Not integrated			
Input generator monitoring	Continuous voltage and frequency monitoring			
Delay generator input	0-10 sec (adjustable)			
Nominal output current	25 A			
Automatic fuses	Not integrated			
Energy consumption (AC, all inputs)	27W			
Power consumption (inverter capacity only)	< 1W			
Switching time	Switch on 12-22 ms / switch off 4-19 ms			
Temperature range (specified)	-5°C to 60°C / 23 to 140°F			
Temperature range (ambient)	-25°C to 70°C / -13 to 158°F			
Temperature range (not working)	-60°C to 80°C / -76 to 176°F			
Relative humidity	max. 95%, non-condensing			
Frequency monitoring	Yes			
Cable diameter	0,5 - 10 mm² / AWG 20-7			
International Protection rating	IP23			

WP – AC TRANSFER SYSTEM SWITCH	5KW	10 KW	16KW
Art.nr.	50214690	50214691	50214692
GENERAL SPECIFICATIONS			
Power rating	5kW	10 kW	16kW
Nominal input voltage	230 V (50/60 Hz) *		
Input voltage range	200-250 V		
No. of AC inputs	3 (shore, generator, inverter)		
No. of AC outputs	3 output groups		
Dimensions, hxwxd	340 x 261 x 144 mm / 13,4 x 10,3 x 5,7 inch		
Weight	4.4 kg / 9.7 lb		
TECHNICAL SPECIFICATIONS			
LED indicators on cabinet	Power sources present indication and 'load on inverter' mode		
Nominal input current generator	25 A	42 A	68A
Nominal input current shore power	25 A	42 A	68A
Nominal input current inverter	25 A	42 A	68A
Earth leakage switch	Not integrated		
Input generator monitoring	Continuous voltage and frequency monitoring		
Delay generator input	0-10 sec (adjustable)		
Nominal output Short circuit current	25 A	42 A	68A
Nominal output current	25 A	42 A	68A
Automatic fuses	No, depends on system		
Energy consumption (AC, all inputs)	27W		
Power consumption (inverter capacity only)	< 1W		
Switching time	switch on 12-22 ms / switch off 4-19 ms		
Temperature range (specified)	-5°C to 60°C / 23 to 140°F		
Temperature range (ambient)	-25°C to 70°C / -13 to 158°F		
Temperature range (not working)	-60°C to 80°C / -76 to 176°F		
Relative humidity	max. 95%, non-condensing		
Frequency monitoring	Yes		
Cable diameter	0.5-10 mm²/AWG 20-7, remote control 0.14-2.5 mm²/AWG 26-13		
International Protection rating	IP23		

WP-GI

Galvanic protection

Connecting a yacht or ship to shore power in a harbour can consequently lead to the vessel sustaining damage if galvanic isolation has not been taken in to account. Galvanic corrosion can drastically damage the vessel's underwater metal parts. Corrosion can be partially prevented by the application of galvanic anodes (sacrificial anodes) below the waterline. How effective an anode is depends on a good electrical connection, and is directly proportional to the surface area of the anode.

WhisperPower offers a selection of products to help minimize galvanic corrosion such as the cost effective galvanic isolator and the WP-GI isolation transformer.

▲ WP-GI 3600 Compact Isolation-transformer

What is a galvanic isolator

- It is a small metal enclosure containing electronics and semiconductors
- It optimizes the life of the galvanic anodes and protects metal parts on the boat against galvanic corrosion. It prevents stray currents from the shore reaching the boat
- A WhisperPower Galvanic isolator is connected to the anode and the equipotential system on board
- It lets through a nominal current of 30 A or 60 A

Why choose a WP-GI Isolation transformer

- Installing a WP-GI is the best and safest solution
- The WP-GI is indispensable for steel or aluminium boats
- The ground loop between the shore and ship is interrupted fully by the coil in the WP-GI, preventing galvanic corrosion
- The WP-GI has to be installed inside the boat, close to the shore power connection - the AC onboard installation is connected to the WP-GI output
- Power rating of 16 A and 32 A (2 x WP-GI's in parallel)
- Built-in soft start suppresses inrush current and prevents the shore fuses from tripping
- The WP-GI can also be adjusted for 120 VAC shore power (and vice versa)
- Can be connected worldwide
- Absolutely silent, no humming

▶ WP-GI 3600 Galvanic Isolation-transformer

Technical specifications WP-GI

	WP-GI 3600 ISOLATION TRANSFORMER	WP-GI 3600 COMPACT ISOLATION TRANSFORMER	WP-GI 7000 (2 PIECE WP-GI 3600 FOR PARALLEL USE)
Article Nr.	60110100	60110102	60110300
TECHNICAL SPECIFICATIONS			
Application	Isolation transformer for electrical safety and protections against galvanic corrosion		
Transformer type	Toroidal isolation transformer with two windings		
Construction design	Special vibration damping mountings		
Cooling	Temperature controlled increasing (uniform) fan cooling above 60°C temperature		
WINDING INFORMATION			
Nominal power	3.6 kVA	3.6 kVA	7.0 kVA
Nominal voltage	230 V / 110 V	230 V / 110 V	230 V / 110 V
Nominal frequency	50 Hz (60 Hz USA)	50 Hz (60 Hz USA)	50 Hz (60 Hz USA)
Nominal current	16 A / 32 A	16 A / 32 A	30 A / 60 A
Inrush current	Built-in soft start, <4 A per transformer		
Supply points	Primary, secondary, middle (110 Vac)		
Windings (Material)	Copper	Copper	Copper
Temperature rise class	F 100 K	F 100 K	F 100 K
Isolation class	H 180 C	H 180 C	H 180 C
Isolation level	Class AC3	Class AC3	Class AC3
Impedance	Secondary <3.0% at 3.6 kVA		
GENERAL			
Consumption (no load)	21W per transformer	21W per transformer	21W per transformer
Efficiency (At full load)	>95%	>95%	>95%
Ambient operating temperature	-10°C .. +45°C, with power reduction up to 80°C		
Storage temperature	-25°C .. +85°C	-25°C .. +85°C	-25°C .. +85°C
Relative humidity during operation	up to 95%, non-condensing	up to 95%, non-condensing	up to 95%, non condensing
Noise levels	<4.,0 dB(A); <50dB(A) with ventilator		
User interface	No	No	No
PROTECTIONS			
Current rating / short circuit	Not built-in, external fuse(s) subject to local regulations		
Temperature protection	Automatic shut down at core temperature > 120°C		
Too high voltage	Soft start protection with fuse		
Earth isolation between windings	Conforms to ABYC, resistant against full leakage current		
Safety standards	IEC 60079, IEC 60726		
MECHANICAL SPECIFICATIONS			
International Protection rating	IP21	IP21	IP21
Connection In/Out	maximum 6mm²	maximum 6mm²	maximum 6mm²
Cable gland	22mm	22mm	22mm
Dimensions (height×width×depth)	510×330×150mm	380x290x208mm	510×330×150mm (2 piece)
Mounting holes	M10	M8	M10
Weight	28.6kg	28.6kg	28.6kg (2 piece)
Material housing	Sheet steel	Sheet steel	Sheet steel
Colour & finish	RAL9003 powder coating	RAL9010white+ AE80104123621black	RAL9003 powder coating

ACCESSORIES ARTICLE NR. *It is recommended to incorporate a earth leakage protection in the AC supply.*	
60110105	WP-GI alternative box for DIN-rail mounting
50214640	Shore power fuse 16A/230 V single phase, 3 core
50214641	Shore power fuse 25 A/230 V single phase, 3 core
50214642	Shore power fuse 35 A/230 V single phase, 3 core
50214645	WP-Energy Meter, 65 A phase and zero, for DIN-rail mounting

WP-GI Galvanic isolator 16A	
Article Nr. 60110140	
Maximum current	16A
Peak current	1600 A / 20ms
Connection	2× M6
Cooling fins	aluminium
International Protection rating	IP67
Material	anodised aluminium
Dimensions (height×width×depth)	60×120×200mm

WP-GI Galvanic isolator 32 A	
Article Nr. 60110150	
Maximum current	32 A
Peak current	1600 A / 20ms
Connection	2× M6
Cooling fins	aluminium
International Protection rating	IP67
Material	anodised aluminium
Dimensions (height×width×depth)	63×164×235mm

CE

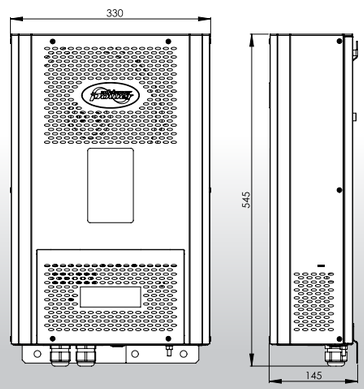

NEW
PRODUCTS
& CONCEPTS

WhisperPower

Modular DC Distribution

Compact & heavy duty range

With an increase in the use of electrical devices and systems on board, such as electric winches, bow thrusters, stern thrusters, electric cooking and airconditioning via the inverter, DC systems and accompanying batteries also need to be able to cope with these heavier loads. WhisperPower now also supplies turnkey “bespoke” DC distribution systems made up of high quality electrical components. These components can either be combined to form a system by the installer or, if required, be delivered by WhisperPower as a plug-and-play ready-made connection set.

We can pre-fab the DC distribution system for you

Example of a pre-assembled DC distribution assembly, as a plug-and-play solution

“We’ve been building since 1964, renowned motor yachts for Dutch and international customers. With experience in the profession I have gained in recent decades, I like to work with companies that provide good gear for a good price with good service. WhisperPower is one such company, of that you can be assured.”

Wies Hokwerda, Boarnstream Yacht, Friesland

DC Modular high current busbars and Fuse holders

Due to the ever increasing complexity of electrical DC systems on board of vehicles or in stationary applications, there is a growing need for a uniform set of products that significantly improves the installation time and flexibility. The WhisperPower DC Modular product range offers a perfect solution for this. It contains a wide range of high current busbars, fuse holders and interconnection materials. Compared to more traditional and often incompatible DC distribution products, the DC Modular system offers many innovative features.

The DC Modular product range is also a perfect companion for WhisperPower battery monitoring devices.

All DC Modular products are equipped with stainless steel studs, washers and nuts for optimal corrosion resistance. Tin plated high purity copper busses provide maximum conductivity, reducing heat and improving efficiency. The base material used for the DC Modular products is made from a special fibre reinforced compound. This material offers excellent high temperature properties, good chemical resistance and high strength. This focus on the highest quality materials ensures long life in harsh environments. All DC Modular products are designed and assembled in The Netherlands.

Easy in-system connection access due to top locked covers by convenient thumb screws

Special fiber reinforced base material offers excellent high temperature properties, good chemical resistance and high strength

Smart terminal design allows dual mirrored cable lug connections

Top sides of transparant covers are equipped with recessed locations to properly add custom labels

Robust transparent covers with breakouts to allow wire access from any direction

Tin plated high purity copper busses provide maximum conductivity, reducing heat and improving efficiency

Stainless steel studs, nuts and washers for optimal corrosion resistance

Transparent polycarbonate cover with break-out side skirts at each side, for easy cable entry

The optional adapter plate allows a mixture of high- and low power cables to be connected to the same stud

Multiple fuseholders and busbars can be connected to each other with the optional link plates

Smart terminal design allows dual mirrored cable lug connections

DC Modular high current busbars

The DC Modular high current busbars are used to distribute high DC currents to a number of connected cables, or other DC Modular family members. The solid and compact design, as well as the possibility to link up multiple busbars on a fixed grid, make these products the best choice for all professional DC power systems. The high current busbars are available with M8 or M10 stud sizes.

Features:

- Stainless steel studs, nuts and washers for optimal corrosion resistance
- Tin plated high purity copper busses provide maximum conductivity, reducing heat and improving efficiency
- Special fiber reinforced base material offers excellent high temperature properties, good chemical resistance and high strength
- Unique grid optimized footprints allow space saving arrangements of multiple products
- Common interconnection heights for easy combining of multiple products using link plates
- Robust transparent covers with breakouts to allow wire access from any direction
- Smart terminal design allows dual mirrored cable lug connections
- Easy in-system connection access due to top locked covers

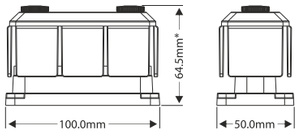

* Total height without cover is 56.3mm

WP-MDC BUSBAR 3 STUD BUSBAR					
Model	**Art.no.**	**Grid size**	**Maximum Current**	**Max. Voltage[1])**	**Connection stud size**
WP-MDC 3xM8 Busbar (50VDC/600A)	50212009	1 x 2	600 A	50 V	M8
WP-MDC 3xM10 Busbar (50VDC/600A)	50212010	1 x 2	600 A	50 V	M10

[1]) Higher voltages may require additional safety measures

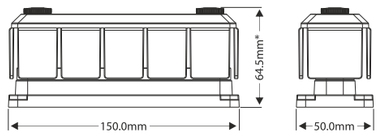

* Total height without cover is 56.3mm

WP-MDC BUSBAR 5 STUD BUSBAR					
Model	**Art.no.**	**Grid size**	**Maximum Current**	**Max. Voltage[1])**	**Connection stud size**
WP-MDC 5xM8 Busbar (50VDC/600A)	50212011	1 x 3	600 A	50 V	M8
WP-MDC 5xM10 Busbar (50VDC/600A)	50212012	1 x 3	600 A	50 V	M10

[1]) Higher voltages may require additional safety measures

DC Modular insulated studs

The DC Modular single and dual insulated studs are ideal parts to extend cables, add power taps or form termination end-points. The solid and compact design, as well as the possibility to link these up with other DC Modular family members, make these products the best choice for all professional DC power systems. The insulated studs are available with M8 or M10 stud sizes.

Features:

- Stainless steel studs, nuts and washers for optimal corrosion resistance
- Special fiber reinforced base material offers excellent high temperature properties, good chemical resistance and high strength
- Unique grid optimized footprints allow space saving arrangements of multiple products
- Common interconnection heights for easy combining of multiple products using link plates
- Robust transparent covers with breakouts to allow wire access from any direction
- Top sides of transparant covers are equipped with recessed locations to properly add custom labels (Dual insulated stud only)
- Smart terminal design allows dual mirrored cable lug connections
- Easy in-system connection access due to top locked covers

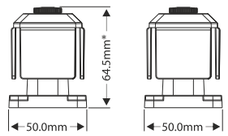

* Total height without cover is 56.3mm

WP-MDC BUSBAR SINGLE INSULATED STUD					
Model	**Art.no.**	**Grid size**	**Maximum Current**	**Max. Voltage[1])**	**Connection stud size**
WP-MDC 1xM8 Single Stud BUSBAR (50VDC) (Set of 2pcs)	50212005	1 x 1	N/A	50 V	M8
WP-MDC 1xM10 Single Stud BUSBAR (50VDC) (Set of 2pcs)	50212006	1 x 1	N/A	50 V	M10

[1]) Higher voltages may require additional safety measures

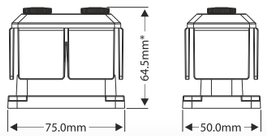

* Total height without cover is 56.3mm

WP-MDC BUSBAR DUAL INSULATED STUD					
Model	**Art.no.**	**Grid size**	**Maximum Current**	**Max. Voltage[1])**	**Connection stud size**
WP-MDC 2xM8 Dual Stud BUSBAR (50VDC)	50212007	1 x 1.5	N/A	50 V	M8
WP-MDC 2xM10 Dual Stud (50VDC)	50212008	1 x 1.5	N/A	50 V	M10

[1]) Higher voltages may require additional safety measures

COMPACT 300A

DC Modular fuseholders

A wide range of fuseholders are available in the DC Modular lineup, covering fuse Amp ratings from 35A up to 600A. Fuseholders are offered for the Mega®, ANL and Class-T type of fuses, providing solutions for a wide range of applications. The solid and compact design, as well as the possibility to link up multiple fuseholders on a fixed grid, make these products the best choice for all professional DC power systems.

Features:

- Stainless steel studs, nuts and washers for optimal corrosion resistance
- Tin plated high purity copper busses provide maximum conductivity, reducing heat and improving efficiency
- Special fiber reinforced base material offers excellent high temperature properties, good chemical resistance and high strength
- Unique grid optimized footprints allow space saving arrangements of multiple products
- Common interconnection heights for easy combining of multiple products using link plates (except Mega and ANL (300A) fuseholders)
- Robust transparent covers with breakouts to allow wire access from any direction
- Smart terminal design allows dual mirrored cable lug connections
- Easy in-system connection access due to top locked covers (except Mega and ANL (300A) fuseholders)

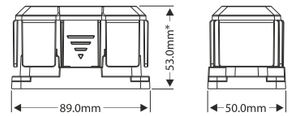

* Total height without cover is 43.5mm

WP-MDC-CP MEGA COMPACT SERIES FUSE HOLDER MEGA FUSE HOLDER					
Model	**Art.no.**	**Grid size**	**Fuse range [1])**	**Max. Voltage[2])**	**Connection stud size**
WP-MDC-CP Mega Fuse holder **compact** (50VDC/up to 300A) M8 version	50212013	1 x 1.78 [3])	40 .. 300 A	50 V	M8

[1]) Compatible with Littelfuse® 'Mega' and Cooper Bussmann® 'AMG' fuses
[2]) Higher voltages may require additional safety measures
[3]) The Mega fuse holder is optimized for stand-alone use and is not compatible with link- and adapter plates

	WP-MDC FUSE PROGRAM
Art.no.	**Model**
50212023	WP-MEGA-100 BF2 slow blow fuse 58 V 100 A M8 bolts
50212024	WP-MEGA-150 BF2 slow blow fuse 58 V 150 A M8 bolts
50212025	WP-MEGA-200 BF2 slow blow fuse 58 V 200 A M8 bolts
50212026	WP-MEGA-300 BF2 slow blow fuse 58 V 300 A M8 bolts
50212027	WP-MEGA-80 slow blow fuse 32 V 80 a m8 bolts
50212028	WP-MEGA-100 slow blow fuse 32 V 100 A M8 bolts
50212029	WP-MEGA-150 slow blow fuse 32 V 150 A M8 bolts
50212030	WP-MEGA-200 slow blow fuse 32 V 200 A M8 bolts
50212032	WP-MEGA-300 slow blow fuse 32 V 300 A M8 bolts

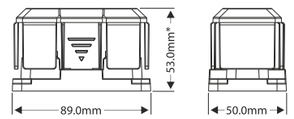

* Total height without cover is 43.5mm

WP-MDC-CP ANL COMP ACT SERIES FUSE HOLDER ANL FUSE HOLDER (300 A)					
Model	**Art.no.**	**Grid size**	**Fuse range [1])**	**Max. Voltage[2])**	**Connection stud size**
WP-MDC-CP ANL Fuse holder **compact** (50V/up to 300A) M8 version	50212014	1 x 2 [3])	35 .. 300 A	50 V	M8
WP-MDC-CP ANL Fuse holder **compact** (50V/up to 300A) M10 version	50212015	1 x 2 [3])	35 .. 300 A	50 V	M10

[1]) M8 version compatible with Littelfuse® 'CNN' and 'CNL' plus Cooper Bussmann® 'ANL' and 'ANN' fuses
M10 version compatible with Littelfuse® '157.57' plus SIBA '90 058 05' fuses
[2]) Higher voltages may require additional safety measures
[3]) The ANL fuse holder has a grid optimized footprint but is not compatible with link- and adapter plates

	WP-MDC FUSE PROGRAM
Art.no.	**Model**
50212033	WP-ANL-100 power fuse 48 V 100 A M10 bolts
50212034	WP-ANL-150 power fuse 48 V 100 A M10 bolts

HEAVY DUTY 600A

DC Modular fuseholders

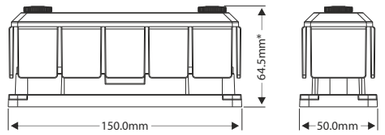

* Total height without cover is 56.3mm

WP-Modular

	WP-MDC-HD ANL HEAVY DUTY FUSE HOLDER ANL FUSE HOLDER (600A)				
Model	**Art.no.**	**Grid size**	**Fuse range [1])**	**Max. Voltage[2])**	**Connection stud size**
WP-MDC-HD ANL Fuse holder **heavy duty** (50V/up to 600A) M8 version	50212016	1 x 3	35 .. 600 A	50 V	M8
WP-MDC-HD ANL Fuse holder **heavy duty** (50V/up to 600A) M10 version	50212017	1 x 3	35 ..600 A	50 V	M10

[1]) M8 version compatible with Littelfuse® 'CNN' and 'CNL' plus Cooper Bussmann® 'ANL' and 'ANN' fuses
M10 version compatible with Littelfuse® '157.57' plus SIBA '90 058 05' fuses
[2]) Higher voltages may require additional safety measures

	WP-MDC FUSE PROGRAM
Art.no.	**Model**
50212035	WP-ANL-300 power fuse 48 V 300 A M10 bolts
50212036	WP-ANL-400 power fuse 48 V 400 A M10 bolts

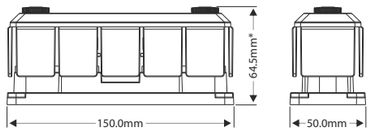

* Total height without cover is 56.3mm

WP-Modular

	WP-MDC-HD ANL HEAVY DUTY FUSE HOLDER CLASS-T FUSE HOLDER (225-400A)				
Model	**Art.no.**	**Grid size**	**Fuse range [1])**	**Max. Voltage[2])**	**Connection stud size**
WP-MDC-HD Class-T Fuse holder **heavy duty** (50V/225A-400A) M10 version	50212018	1 x 3	225 .. 400 A	50 V	M10

[1]) Compatible with Littelfuse® 'JLLN', Cooper Bussmann® / Edison® 'JJN' and 'TJN' and Mersen® 'A3T' fuses
[2]) Higher voltages may require additional safety measures

	WP-MDC FUSE PROGRAM
Art.no.	**Model**
50212037	WP-LIMITROIN - Class-T-225 current limit fast act fuse 225 A
50212038	WP-LIMITROIN - Class-T-400 current limit fast act fuse 400 A

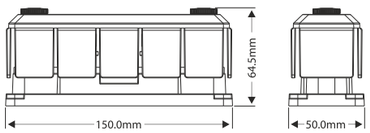

* Total height without cover is 56.3mm

WP-Modular

	WP-MDC-HD ANL HEAVY DUTY FUSE HOLDER CLASS-T FUSE HOLDER (450-600A)				
Model	**Art.no.**	**Grid size**	**Fuse range [1])**	**Max. Voltage[2])**	**Connection stud size**
WP-MDC-HD Class-T Fuse holder **heavy duty** (50V/450A-600A) M10 version	50212019	1 x 3	450 .. 600 A	50 V	M10

[1]) Compatible with Littelfuse® 'JLLN', Cooper Bussmann® / Edison® 'JJN' and 'TJN' and Mersen® 'A3T' fuses
[2]) Higher voltages may require additional safety measures

	WP-MDC FUSE PROGRAM
Art.no.	**Model**
50212039	WP-LIMITROIN - Class-T-450 current limit fast act fuse 450 A
50212040	WP-LIMITROIN - Class-T-600 current limit fast act fuse 600 A

DC Modular accessories

Due to the common interconnection heights, smart space saving arrangements of multiple DC Modular products can be made by linking these together using the optional Link Plates. We have two Link Plate sizes available between which we are able to create all possible combinations. Both Link Plates are compatible with M8 and M10 studs. Additionally, we have equipped the Link Plates with two M4 screws to provide convenient connection points for smaller cables. Should this be required, we also offer an Adapter Plate which allows a mixture of high and low power cables to be connected to the same stud. The Adapter Plate can be used on M8 and M10 studs and offers four connection points for smaller cables.

Features:

- Tin plated high purity copper busses provide maximum conductivity, reducing heat and improving efficiency
- Stainless steel M4 screws and washers provide convenient connection points for smaller cables
- Compatible with M8 and M10 studs

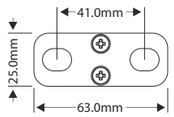

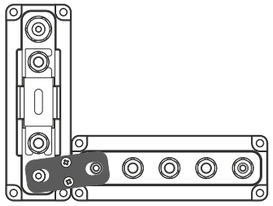

	WP-MDC ADAPTER PLATE			
Model[1])	**Art.no.**	**Maximum Current[2])**	**Dimensions (L x W)**	**Accepts stud size**
WP-MCD Link Plate (41mm pitch) (Set of 2pcs)	50212020	600 A	63.0 x 25.0mm	M8 + M10

[1]) Not compatible with "Mega" and "ANL (300A)" Fuse holders
[2]) Current capacity can be doubled by stacking two Link Plates (after removal of M4 screws

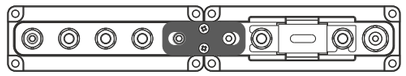

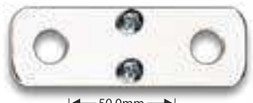

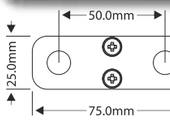

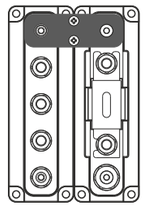

	WP-MDC LINK PLATE 50MM			
Model[1])	**Art.no.**	**Maximum Current[2])**	**Dimensions (L x W)**	**Accepts stud size**
WP-MDC Link Plate (51mm pitch) (Set of 2pcs)	50212021	600 A	75.0 x 25.0mm	M8 + M10

[1]) Not compatible with "Mega" and "ANL (300A)" Fuse holders
[2]) Current capacity can be doubled by stacking two Link Plates (after removal of M4 screws

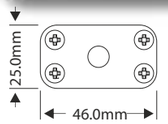

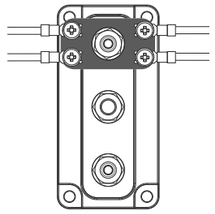

	WP-MDC ADAPTER PLATE			
Model[1])	**Art.no.**	**Maximum Current[2])**	**Dimensions (L x W)**	**Accepts stud size**
WP-MDC Adapter Plate (Set of 2pcs)	50212022	600 A	46.0 x 25.0mm	M8 + M10

[1]) Not compatible with "Mega" and "ANL (300A)" Fuse holders

Model	Art.no.	Grid size	Dimensions (W x L x H)	Fuse range	Max. Voltage [1])	Connection studs	Size A / Size B
WP-MDC Mega Fuse holder	50212013	1 x 1.78	50.0 x 89.0 x 53.0mm	40 .. 300A	50V	M8	38.0 / 77.0mm
WP-MDC ANL Fuse holder (300A) M8 [2])	50212014	1 x 2	50.0 x 100.0 x 53.0mm	35 .. 300A	50V	M8	38.0 / 88.0mm
WP-MDC ANL Fuse holder (300A) M10 [3])	50212015	1 x 2	50.0 x 100.0 x 53.0mm	35 .. 300A	50V	M10	38.0 / 88.0mm
WP-MDC ANL Fuse holder (600A) M8 [2])	50212016	1 x 3	50.0 x 150.0 x 64.5mm	35 .. 600A	50V	M10	38.0 / 138.0mm
WP-MDC ANL Fuse holder (600A) M10 [3])	50212017	1 x 3	50.0 x 150.0 x 64.5mm	35 .. 600A	50V	M10	38.0 / 138.0mm
WP-MDC Class-T Fuse holder (400A)	50212018	1 x 3	50.0 x 150.0 x 64.5mm	225 .. 400A	50V	M10	38.0 / 138.0mm
WP-MDC Class-T Fuse holder (600A)	50212019	1 x 3	50.0 x 150.0 x 64.5mm	450 .. 600A	50V	M10	38.0 / 138.0mm

[1]) Higher voltages may require additional safety measures
[2]) For M8 ANL type fuses
[3]) For M10 ANL type fuses

Model	Art.no.	Grid size	Dimensions (W x L x H)	Maximum Current	Max. Voltage [1])	Connection studs	Size A / Size B
WP-MDC 1xM8 Single Stud	50212005	1 x 1	50.0 x 50.0 x 64.5mm	N/A	50V	M8	38.0 / 38.0mm
WP-MDC 1xM10 Single Stud	50212006	1 x 1	50.0 x 50.0 x 64.5mm	N/A	50V	M10	38.0 / 38.0mm
WP-MDC 2xM8 Dual Stud	50212007	1 x 1.5	50.0 x 50.0 x 64.5mm	N/A	50V	M8	38.0 / 63.0mm
WP-MDC 2xM10 Dual Stud	50212008	1 x 1.5	50.0 x 50.0 x 64.5mm	N/A	50V	M10	38.0 / 63.0mm
WP-MDC 3xM8 Busbar	50212009	1 x 2	50.0 x 100.0 x 64.5mm	600A	50V	M8	38.0 / 88.0mm
WP-MDC 3xM10 Busbar	50212010	1 x 2	50.0 x 100.0 x 64.5mm	600A	50V	M10	38.0 / 88.0mm
WP-MDC 5xM8 Busbar	50212011	1 x 3	50.0 x 100.0 x 64.5mm	600A	50V	M8	38.0 / 138.0mm
WP-MDC 5xM10 Busbar	50212012	1 x 3	50.0 x 100.0 x 64.5mm	600A	50V	M10	38.0 / 138.0mm

[1]) Higher voltages may require additional safety measures

DC installations

Robust and reliable switches-compact series

WhisperPower's philosophy is simple and clear: every single part of the electrical system must be robust and reliable. Therefore all WhisperPower products are assembled from carefully designed components, for the long term.

From the perspective of safety on board it is vital that all parts and components related to the battery comply with this principle. We guarantee a safe and secure connection from your batteries - from starter batteries to large Lithium-ion battery banks, because we have the right components for your system requirements.

Components for DC installations:

- Heavy duty manual battery switches — see page 102
- Remote-controlled battery switches — see page 112
- Battery isolators — see page 114
- Intelligent battery switches — see page 116
- DC-DC converters — see page 120

DC installations

WP Compact - 300 A

Designed for battery banks of 12, 24 or 48 VDC, manually operated COMPACT series DC Switches are the best choice when it comes to connecting or disconnecting DC devices to / from a battery bank.

Features and Benefits

- Robust and compact design
- Tin-plated copper studs for maximum conduction and corrosion resistance
- Multiple cable terminals, 22mm thread
- One-piece terminal prevents parts loosening
- Multiple cable input enables front or built-in panel mounting
- Circuit identification labels included
- CE marked
- UL certified in accordance with UL 1701 (power switches)
- ABYC compliant
- Conforms to UL 1500 SAE J 1171 external ignition protection requirements
- IP66 protection rating

	WP-COMPACT SERIES	WP-COMPACT SERIES	WP-COMPACT SERIES
Article Nr.	50214701	50214702	50214703
TECHNICAL SPECIFICATIONS			
Product type	Hand operated battery switch	Hand operated battery switch	Hand operated battery switch
Switching	on-off	Selection	Selection + combination
INPUT			
Number of batteries	1	2	2
Number of switching positions	2	4	3
Combine batteries	-	Yes	Yes
I 10 inrush current 10s	1500 A	1500 A	1500 A
I 60 inrush current 1min	775 A	775 A	775 A
I 300 C interrupted 5min	500 A	500 A	500 A
I C continuously	300 A	300 A	300 A
Maximum operating voltage	48 VDC	32 VDC	32 VDC
GENERAL			
Ambient operating temperature	-20ºC .. +40ºC	-20ºC .. +40ºC	-20ºC .. +40ºC
Storage temperature	-25ºC .. +85ºC	-25ºC .. +85ºC	-25ºC .. +85ºC
Relative humidity in use	95%, non-condensing	95%, non-condensing	95%, non-condensing
MECHANICAL SPECIFICATIONS			
Thread connections	M10 (3/8'-.16)	M10 (3/8'-.16)	M10 (3/8'-.16)
Length threaded stud	22mm	23mm	24mm
Maximum torque	13.56Nm	13.56Nm	13.56Nm
Material threaded stud	Tin plated copper	Tin plated copper	Tin plated copper
Housing width	72mm	72mm	72mm
Housing height	78mm	78mm	78mm
Weight	0.28kg	0.28kg	0.28kg
Borehole spacings	55mm	56mm	57mm
Mounting diameter behind panel	59mm	60mm	61mm
Connection screws	10mm	11mm	12mm
International Protection rating	IP66	IP67	IP68
Housing colour	RAL9011 graphite black	RAL9011 graphite black	RAL9011 graphite black
Cable opening	28mm	29mm	30mm
Ignition protection	UL 1500 SAE J1171	UL 1500 SAE J1172	UL 1500 SAE J1173
Certification	CE, ISO 8846	CE, ISO 8847	CE, ISO 8848

Circuit type on/off

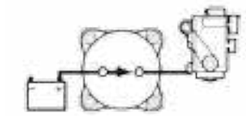

Switch set to 'On'

Dual circuit

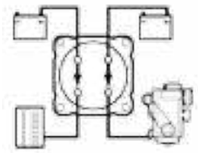

Switch set to 'On'
Battery banks isolated

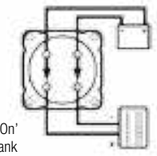

Switch set to 'On'
One Battery bank

Dual + Combine circuit

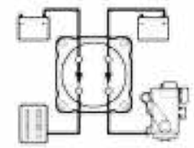

Switch set to 'On'

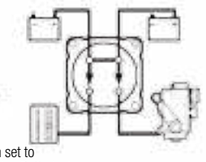

Switch set to
'Combine Batteries'

Installation Drawing

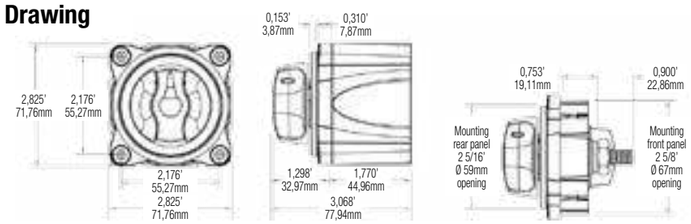

Mounting Options

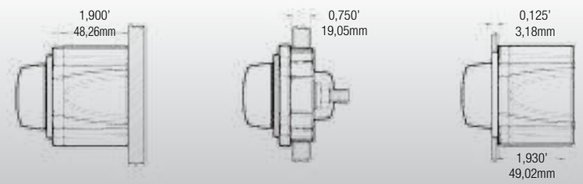

Surface **Front panel** **Rear panel**

ENGINEERED FOR THE HARSH MARINE ENVIRONMENT AND BUILT TO LAST
QUALITY PRODUCTS

DC installations

Battery switches Heavy duty -Series

Quality products designed for harsh marine environments and built to last

Features and Benefits

- Robust and compact design
- Tin-plated copper studs for maximum conduction and corrosion resistance
- Multiple cable terminals, 22mm thread
- One-piece terminal prevents parts loosening
- Multiple cable input enables surface front or built-in panel mounting
- Circuit identification labels included
- CE marked
- UL certified in accordance with UL 1701 (power switches)
- ABYC compliant
- Conforms to UL 1500 SAE J 1171 external ignition protection requirements
- IP66 protection rating

	WP-HD HEAVY DUTY SERIES	WP-HD HEAVY DUTY SERIES
Article Nr.	50214711	50214712
TECHNICAL SPECIFICATIONS		
Product type	Hand operated battery switch	Hand operated battery switch
Switching	on-off	Select from 4 positions
INPUT		
Number of batteries	1	2
Number of switching positions	2	4
Combine batteries	-	Yes
I 10 inrush current 10s	2750 A	2750 A
I 60 inrush current 1min	1325 A	1150 A
I 300 C interrupted 5min	900 A	700 A
I C continuously	600 A	500 A
Maximum operating voltage	32 VDC	32 VDC
GENERAL		
Ambient operating temperature	-20ºC .. +40ºC	-20ºC .. +40ºC
Storage temperature	-25ºC .. +85ºC	-25ºC .. +85ºC
Relative humidity	95%, non-condensing	95%, non-condensing
MECHANICAL SPECIFICATIONS		
Thread connections	M12	M12
Length threaded stud	22mm	22mm
Maximum torque	24.86Nm	24.86Nm
Material threaded stud	Tin plated copper	Tin plated copper
Housing width	98mm	98mm
Housing height	79mm	79mm
Weight	0.59kg	0.59kg
Borehole spacings	76mm	77mm
Mounting diameter behind panel	92mm	92mm
Connection screws	M6	M6
International Protection rating	IP66	IP67
Housing colour	RAL9011 graphite black	RAL9011 graphite black
Cable opening	27.9mm	27.9mm
Ignition protection	UL 1500 SAE J1170	UL 1500 SAE J1171
Certification	CE, ISO 8845	CE, ISO 8846

Circuit type on/off

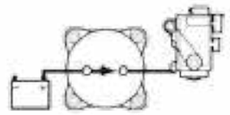

Switch set to 'On'

Circuit type selector 4 positions

Switch set to '1'

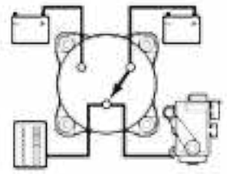

Switch set to '2'

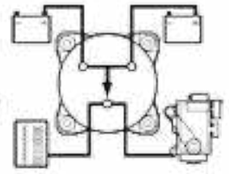

Switch set to '1+2'

Installation Drawing

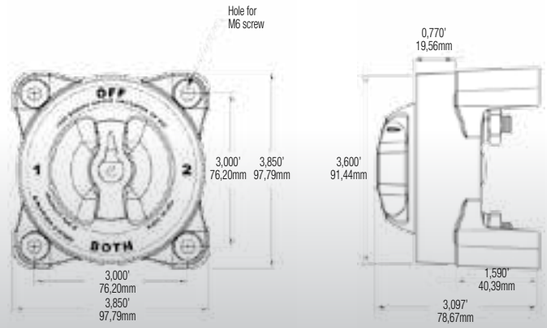

Mounting Options

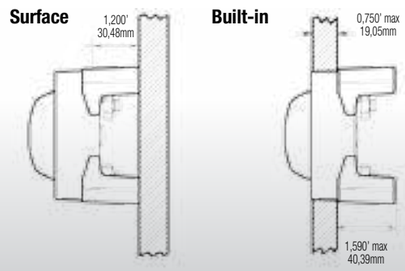

DC installations

Remote battery switches - 500 A

with magnetic latch

These are robust, quality products engineered for harsh marine environments and built to last. The WP-ML is a heavy duty remote battery switch. It features a 500 Amp magnetic latching (bi-stable) switch providing high-amp switching under load, which can be operated both manually or remotely.

- 500 Amp continuous load
- Bi-stable or auto magnetic latching, very low consumption at no-load mode
- Manual override knob provides an added level of safety allowing control with or without power and LOCK- OFF option for service / maintenance
- Remote LED indicator for switch state possible (optional)
- Tin-plated M10 copper studs for maximum conduction and corrosion resistance
- Multiple cable terminals, 22mm thread
- Silver alloy contacts provide high reliability for switching live loads
- Optional Contura Switch to operate the Latch Relay
- IP66 protection rating

Remote control panel

WP-ML & WP-ACR

WP-ML

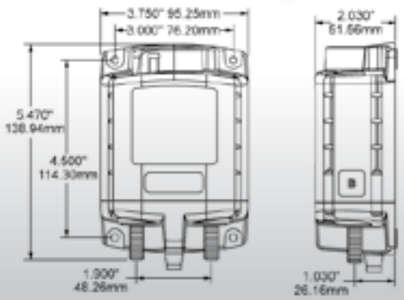

	WP-ML-SERIES REMOTE-OPERATED BATTERY SWITCH	WP-ML-SERIES REMOTE-OPERATED BATTERY SWITCH	WP-ML - AUTOMATIC CHARGE RELAY	WP-ML - AUTOMATIC CHARGE RELAY
Article Nr.	50214731	50214732	50214735	50214736
TECHNICAL SPECIFICATIONS				
Product type	12 VDC remote	24 VDC remote	12 VDC magnetic latch	24 VDC magnetic latch
	magnetic battery swich	magnetic battery swich	charger relay	charger relay
Switching / Circuit type	ON-OFF bi-stable	ON-OFF bi-stable	Bi-stable ACR	Bi-stable ACR
INPUT				
Number of batteries	1	1	2	2
Number of switching positions	2	2	2	2
Primary manual operation	Locked off/on	Locked off/on	Locked off/on	Locked off/on
I 10 inrush current 10s	2500 A	2500 A	2500 A	2500 A
I 60 inrush current 1min	1100 A	1100 A	1100 A	1100 A
I 300 C interrupted 5min	700 A	700 A	700 A	700 A
I C continuously	500 A	500 A	500 A	500 A
Maximum operating voltage	32 VDC	32 VDC	32 VDC	32 VDC
Operating circuit voltage	10.1 .. 16.5 VDC	20.2 .. 32.9 VDC	10.1 .. 16.5 VDC	20.2 .. 32.9 VDC
Consumption in Standby	0 mA	0 mA	< 40 mA	< 40 mA
Consumption during charging	7A	4 A	<7A	<7A
Remote control during switching	100 mA	100 mA	100 mA	100 mA
Battery banks automatically combined when voltage levels go above:	-	-	13.5 VDC for 30s, 13.0 VDC for 90s	27.0 VDC for 30s, 26.0 VDC for 90s
Battery banks automatically isolated when voltage levels are:	-	-	• below 9.6 VDC (shut down low voltage) • below 12.35 VDC for 10s • below 12.37 VDC for 30s • above 16.2 VDC (shut down high voltage)	• below 19.2 VDC (shut down low voltage) • below 24.7 VDC for 10s • below 25.5 VDC for 30s • above 32.4 VDC (shut down high voltage)
GENERAL				
Ambient operating temperature	-20ºC .. +40ºC	-20ºC .. +40ºC	-20ºC .. +40ºC	-20ºC .. +40ºC
Storage temperature	-25ºC .. +85ºC	-25ºC .. +85ºC	-25ºC .. +85ºC	-25ºC .. +85ºC
Relative humidity in use	95%, non-condensing	95%, non-condensing	95%, non-condensing	95%, non-condensing
Number of switching cycles (with load)	100.000 cycles	100.000 cycles	100.000 cycles	100.000 cycles
MECHANICAL SPECIFICATIONS				
Thread connections	M10 (3/8'-.16)	M10 (3/8'-.16)	M10 (3/8'-.16)	M10 (3/8'-.16)
Length threaded stud	23mm	23mm	23mm	23mm
Maximum torque	15.5Nm	15.5Nm	15.5Nm	15.5Nm
Material threaded stud	Tin plated copper	Tin plated copper	Tin plated copper	Tin plated copper
Housing width	95.25mm	95.25mm	95.25mm	95.25mm
Housing height	138.94mm	138.94mm	138.94mm	138.94mm
Weight	51.56mm	51.56mm	51.56mm	51.56mm
Borehole spacings	0.8kg	0.8kg	0.8kg	0.8kg
Mounting diameter behind panel	114.3 mm × 76.20 mm	114.3 mm × 76.20 mm	114.3 mm × 76.20 mm	114.3 mm × 76.20 mm
Connection screws	4mm	4mm	4mm	4mm
International Protection rating	IP66	IP66	IP66	IP66
Housing colour	RAL9011 graphite black	RAL9011 graphite black	RAL9011 graphite black	RAL9011 graphite black
Cable opening	28.4mm	28.4mm	28.4mm	28.4mm
Ignition protection	SAE J1171	SAE J1171	SAE J1171	SAE J1171
Certification	CE, ISO 8846	CE, ISO 8846	CE, ISO 8846	CE, ISO 8846

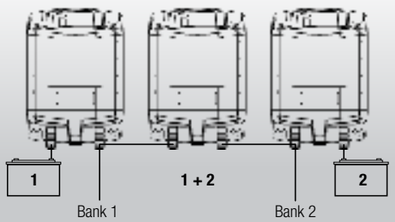

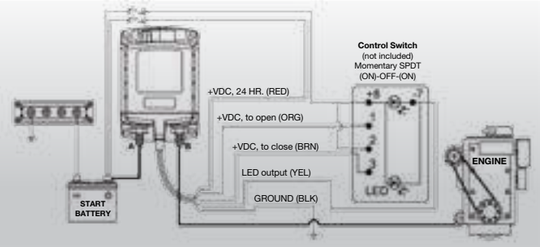

DC installations

Charging individual battery banks

WBI series - WhisperPower Battery Isolators

Our electronic WBI battery Isolators are designed to charge 2 or more individual batteries or battery banks from one power source: a battery charger or a DC alternator. The WBI is an ideal solution when the output voltage of a charge device cannot be adjusted to compensate for a voltage drop which occurs when an ordinary battery isolator is being used. The WBI keeps the charge voltage at the correct charge level.

The WhisperPower electronic battery isolator is the best on the market for simultaneously charging multiple battery banks. Plus it can be combined with any alternator or battery charger. It is designed for both existing and new installations without the need to adjust to the alternator. Because the voltage loss between the alternator and the battery is negligible, an electronic battery isolator performs much better than conventional models. As a result, the batteries are charged quickly and completely. The WhisperPower battery isolator uses electronics ensuring that the charging voltage remains at the correct level even with multiple battery banks, whereas conventional battery isolators use less efficient diode isolators. WhisperPower battery isolators can be used anywhere, even on standard alternators with external reinforcement and voltage measurers when it can then be connected to the start contact IG.

Benefits:

- 2 or 3 battery banks quickly and completely charged
- Significant extension of battery life
- Suitable for charge current up to 150 A
- Combine with each alternator and / or battery charger - no adjustments required
- Start Contact compatible with all types of alternators for external excitation and voltage measurement
- Hardly any voltage drop over the battery isolator
- No voltage drop if the batteries are fully charged
- Prevents current flow from one battery to the other
- Ensures that the (starter) battery remains fully charged

	WBI 150-2 IG	WBI 150-3 IG
Article Nr.	60115002	60115003
TECHNICAL SPECIFICATIONS		
Number of outputs	2	3
Maximum current	150 A	150 A
Nominal system voltage	12 or 24 VDC	12 or 24 VDC
Input voltage range	8 .. 30 VDC	8 .. 30 VDC
Voltage drop	0.0 V at 10 A / 0.1V at 20 A	0.0 V at 10 A / 0.1V at 20 A
Isolation to ground	> 500 V at 60 Hz	> 500 V at 60 Hz
Operating temperature	-40 .. +85°C	-40 .. +85°C
Conforms to	EN 50081-1 (Emission) EN 50082-1 (immunity) EN 60950-1 (safety)	
Dimensions (l × w × h)	146 × 85 × 92 mm	146 × 85 × 92 mm
Weight	810g	810g
Warranty	2 years	2 years

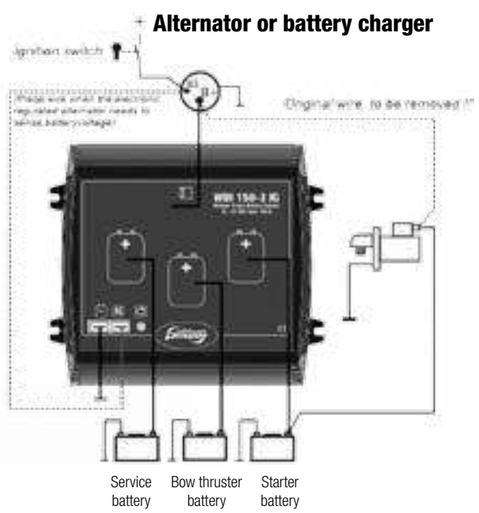

We know from experience, that the performance of the electrical system depends entirely on the quality of the components used. With WhisperPower, we know that this part is taken care of. We build yachts in a long way from the marine equipment industry, the WhisperPower one-stop-shop concept is of great economic importance for us.

Guangdong Jianglong Shipbuilding Co., Ltd., Zhuhai

DC installations

Intelligent Battery Links

WhisperPower microprocessor - controlled Battery Combiners

WhisperPower Battery Links are smart switch regulators that automatically connect two battery banks if the charge voltage rises above a certain value for at least five seconds. This means that the battery banks can be charged from the same source. To protect the battery banks they are separated from each other as soon as the voltage drops. There are two models available: the 120 A version (180 A max) and 160 A version (480 A max).

This is a smart, independent and automatic device. For extra starting power there is a start assist function. With a simple push of a button the service battery bank is temporarily connected to the starter battery. The connection is terminated after 30 seconds. The WhisperPower Battery Link clearly indicates when the batteries are connected. If the LED is not lit, the relay is open. Whenever one of the batteries is being charged, the LED starts to blink slowly indicating a 30 second period until the relay closes to connect the batteries. Whilst the relay remains closed, the LED remains illuminated.

Features and Benefits

- Simultaneous charging of two batteries
- Intelligent battery monitoring function
- Safe connect algorithm
- Temporary additional power with start assist function
- Simultaneous charging of two batteries
- Simple to install, no programming required
- Compact and robust
- Automatic relay to connect battery banks
- Automatic isolation with voltage drop
- Remote control possible (optional)
- Connect battery banks in parallel for emergency start
- LED indicators

120 A model

160 A model

	WBL-120
Article Nr.	60110120
TECHNICAL SPECIFICATIONS	
Weight	125g
Dimensions (l × w × h)	46 × 80 × 46 mm
Continuous capacity	120 A
Peak capacity /inrush current 10s	180 A
Input voltage	9 .. 35 VDC
Operating temperature	-40 .. 65°C
Maximum voltage drop	0.5 VDC (Approx. 10s delay during disconnection)
Maximum allowable voltage difference	8.0 VDC
AUTOMATIC OPERATION	
Switch-on voltage (minimum)	> 13V at 12 V / >26 V for 24 V installations
Connection delay	5s
Switch-on voltage (maximum)	15.0 V at 12 V / 30.0 V for 24 V installations
Disconnection voltage	12.75 V at 12 V / 25.5 V for 24 V installations
DC-CONSUMPTION	
OFF-Mode (relay not powered)	1.0 mA at 12 V / 1.1mA at 24 V
ON-Mode (inrush current)	0.5 A at 12 V / 0.4 A at 24 V
ON-Mode (relay powered)	50 mA at 12 V / 40 mA at 24 V
LED STATUS	
On	Relay connected
Flashing slowly (0.5Hz)	Delay whist connecting
Flashing fast (2.5Hz)	Alarm: Relay not powered as voltage difference is too big in OFF-Mode (>8.0 VDC) or due to voltage drop being too large in ON-Mode (0.5 VDC)
CONFORMITY	
CE	Yes

Example set up

	WBL-160
Article Nr.	60110160
INPUT	
Smart battery switch	4 c 6
Nominal input voltage	12/24 VDC self detection
Input range no defects	7 .. 32 V
OUTPUT	
Nominal output voltage	Equal to input voltage
Surge outgoing	480 A
Maximum charge current 3s	240 A
Continuous charging current	160 A
Continuous charging current at 40 ° C	160 A
GENERAL	
Consumption in Standby	±2mA
Consumption whilst charging 12 / 24 V	340/170 mA
Consumption whilst connecting 12 / 24 V	340/170 mA
Ambient operating temperature	-10°C .. +40°C
Storage temperature	-25°C .. +85°C
International Protection rating	IP66
Voltage accuracy	2%
Switch-on voltage 12 / 24 V	13.2/26.4 V
Disconnection voltage 12 / 24 V	12.8/25.4 V
Accelerated disconnection voltage 12 / 24 V	11.8/23.6 V
Connection delay	5s
Disconnection delay	60s
Accelerated disconnection	4s
PROTECTIONS	
Polarity	Yes
Voltage too low	Yes
Voltage too high	16/32 V
FEATURES	
Controlled microprocessor	Yes
Voltage too low	Yes
Voltage too high	Yes
Start assist	Yes
LED display	Yes
Output status	No
Input status	Yes
Remote shutdown	No
MECHANICAL SPECIFICATIONS	
Connection in / out	M8
Connections min / status / remote	Faston 6.3mm
Dimensions (h × h × d)	58 × 72 × 108mm
Mounting holes	Dia 6mm, 88.5mm
Weight	0.470kg
Housing / colour	Polyurethane / Black

CE

DC installations

Battery discharge protection

WhisperPower Voltage Guard

The WhisperPower Voltage Guard protects the battery bank against accidental discharge. This is to make sure that the batteries are not damaged before the end of their normal lifespan. The Voltage Guard has to be installed in the DC connection between the battery and the DC consumers. The Voltage Guard is programmable and the desired upper and lower limits of the permissible voltage is easy to set up. Maximum current 200 A.

	WVG-200
Article Nr.	60110200
TECHNICAL SPECIFICATIONS	
Current (continuous/intermittent)	150 / 200 Adc
System voltage	12 / 24 VDC
Input voltage range	8 .. 31VDC
Dimensions (l × w × h)	145 × 92 × 85 mm
Weight	580g
Lower limit battery voltage 12 V	9 .. 12 VDC
Upper limit battery voltage 12 V	15.5 VDC
Lower limit battery voltage 24 V	18 .. 24 VDC
Upper limit battery voltage 24 V	31VDC
Warranty	2 years

height 85 mm

The WhisperPower Voltage Guard is an essential component of a well-equipped battery system ensuring a longer life span for your batteries.
The voltage protection maintains your battery system in optimum condition and can also be used as an intelligent battery switch.
The WVG consists of a high current electronic switch capable of switching loads of up to 200 amps. If the battery voltage drops below a previously set value the load will automatically disconnected.

The on-and-off-values are set by the potentiometer on the front of the unit. When any of these set points are reached, a warning LED will light up and in addition an audible alarm will sound. This is to prevent the battery being discharged below the preset voltage.

Remote monitoring and operation is possible if the WVG is linked to the main panel. A built-in hysteresis allows for a short-term voltage drop caused by switching on a heavy load. The WVG has an extremely low consumption of only 4mA in standby.

The Whisper Power Voltage Guard is the best in its class for a well equipped battery system!

DUTCH QUALITY PRODUCT
MADE IN THE NETHERLANDS

Features and Benefits

- Wide voltage range
- Auto voltage selection 12/24 V
- Maintenance free
- Easy to install
- High load capability
- Low power consumption
- Over voltage protection
- Temperature protection
- WVG increases battery life
- WVG prevents discharging of main battery
- Can be used as main battery switch

BATTERY LIFE TIME EXTENDER

CE

Multifunctional
DC-DC converters

Essential building blocks

In most electrical systems both 24 VDC and 12 VDC equipment is used. WhisperPower Switched Mode DC -DC converters take a particular voltage, for example 24 VDC, and convert it in to another DC voltage, for example 12 V DC. The Switched Mode technology ensures minimal energy loss and high output. Our range is based on three different topologies:

MC-Series
- DC-DC converters with common negative
- Step down from 24 VDC to 12 VDC
- Electronic process, high efficiency, low heat output
- Power rating up to 30 A
- Cannot be used in parallel

MCC-Series
- DC-DC converter with current limitation
- Designed to convert 24 VDC to 12 VDC and to charge 12 V batteries
- Multi step charge characteristics, programmable
- Delivered with temperature sensor as standard
- Can be used as dimming device for DC lighting

MG-Series
- DC-DC converters with galvanic isolation
- Step down from 24 VDC or 48 VDC to 12 VDC
- Step up from 12 VDC to 24 VDC is also possible
- Electronic process, high efficiency, low heat output
- Power rating up to 30 A
- Can be run in parallel for high-demand appliance

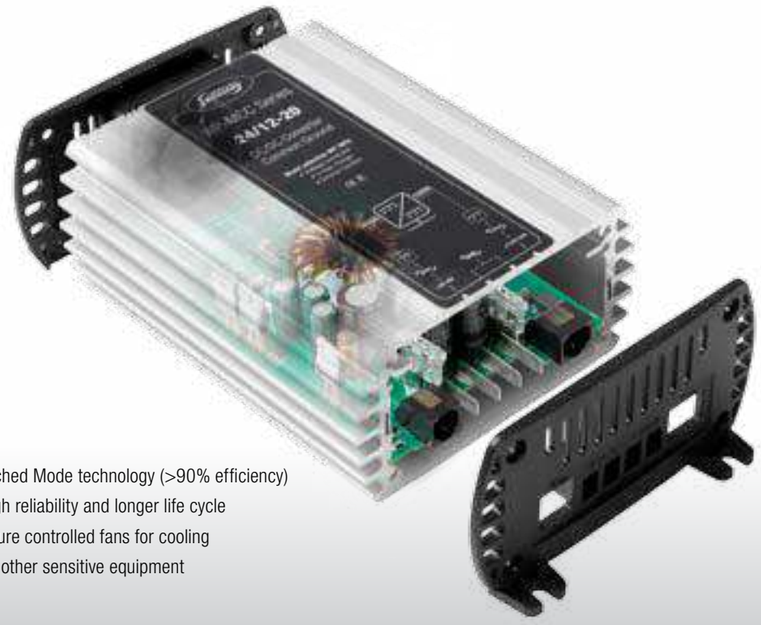

Converter MCC24/12-20
20 Amps with three step charge characteristic

Features and Benefits
- Minimal energy loss thanks to Switched Mode technology (>90% efficiency)
- High quality industrial design for high reliability and longer life cycle
- Silent - no humming, only temperature controlled fans for cooling
- No interference with radios, VHF or other sensitive equipment
- Compact, fast and easy to install
- Excellent price - performance ratio

PHOTO: LINSSEN, THE NETHERLANDS

DC/DC converters

MC SERIES / MCC SERIES

	MC 24/12-30	MC 24/12-20	MC 24/12-12	MC 24/12-08	MC 24/12-05	MC 12/24-10	MCC 24/12-20	MCC 24/12-05
Article Nr.	60110012	60110011	60110016	60110010	60110005	60110017	60110015	60201023
TECHNICAL SPECIFICATIONS								
Converter type	voltage step down and stabilization						voltage step down and stabilization 3-step 12V battery charger, light dimmer function	voltage step down and stabilization
INPUT								
Nominal input voltage	24 VDC	24 VDC	24 VDC	24 VDC	24 VDC	12 VDC	24 VDC	24 VDC
Input range, specifications	18 .. 35 VDC	18 .. 35 VDC	18 .. 35 VDC	18 .. 35 VDC	18 .. 35 VDC	9 .. 18 VDC	24 .. 32 VDC	24 .. 32 VDC
Input range, no defects	0 .. 35 VDC	0 .. 35 VDC	0 .. 35 VDC	0 .. 35 VDC	0 .. 35 VDC	0 .. 18 VDC	0 .. 35 VDC	0 .. 35 VDC
OUTPUT								
Nominal output voltage	13.8 VDC	13.8 VDC	13.8 VDC	13.8 VDC	13.8 VDC	25.0 VDC	13,6 VDC	13.8 VDC
Voltage adjustable	no	no	no	no	no	no	12..15VDC	12 .. 15 VDC
Output accuracy	1%	1%	3%	3%	3%	3%	2%	2%
Ripple, peak output voltage	1%	1%	1%	1%	1%	3%	1%	1%
Maximum power output	490 W	350 W	170 W	110 W	70 W	300 W	300 W	70 W
Continuous output power	420 W	280 W	170 W	110 W	70 W	250 W	270 W	70 W
Maximum output current	35 A	25 A	12 A	8A	5A	12 A	20 A	5A
Continuous output current at 40 °C	up to 30 A	up to 20 A	up to 12 A	up to 8A	up to 5A	up to 10 A	up to 20 A	up to 5A
GENERAL								
Efficiency	>92%	>92%	>92%	>92%	>92%	>93%	>90%	>92%
Consumption no load	<25 mA	<25 mA	<5 mA	<5 mA	<5 mA	<5 mA	<30 mA	<5 mA
Ambient operating temperature	-10ºC .. +40ºC	-10ºC .. +40ºC	-10ºC .. +40ºC	-10ºC .. +40ºC	-10ºC .. +40ºC	-10ºC .. +40ºC	-10ºC .. +40ºC	-10ºC .. +40ºC
Storage temperature	-25ºC .. +85ºC	-25ºC .. +85ºC	-25ºC .. +85ºC	-25ºC .. +85ºC	-25ºC .. +85ºC	-25ºC .. +85ºC	-25ºC .. +85ºC	-25ºC .. +85ºC
Relative humidity in use	up to 95%, non-condensing							
Galvanic isolation	Common negative						Yes, 500 Vac	
Cooling	Mechanical	Convectional	Convectional	Convectional	Convectional	Convectional	Mechanical	Convectional
PROTECTIONS								
Current / short circuit	Restricted by current rating		Yes / fuse	Yes / fuse	Yes / fuse	Yes / fuse	Restricted by current rating	
Overheating, shut down	Power restricted by temperature		No	No	No	No	Power restricted by temperature	
MECHANICAL SPECIFICATIONS								
Faston in/ off, max thread thickness	6mm²	6mm²	6mm²	6mm²	6mm²	6mm²	6mm²	6mm²
Dimensions (h × w × d)	50×151×88mm	50×126×88mm	50×98×88mm	50×98×88mm	50×98×88mm	50×126×88mm	66×191×123mm	50×98×88mm
Mounting holes	dia 4mm, rh 58×143	dia 4mm, rh 58×118	dia 4mm, rh 58×90	dia 4mm, rh 58×90	dia 4mm, rh 58×90	dia 4mm, rh 58×118	dia 4mm, rh 91×177mm	dia 4mm, rh 58×90
Weight	500g	440g	290g	270g	270g	360g	955g	270g
International Protection rating	IP20	IP20	IP20	IP20	IP20	IP20	IP20	IP20
Housing	frame 6	frame 5	frame 4	frame 4	frame 4	frame 5	frame 8	frame 4
Housing material	Anodized aluminium, ABS end caps		Alu / ABS	Alu / ABS	Alu / ABS	Alu / ABS	Alu / ABS	Alu / ABS
Housing colour	RAL 9011 graphite black						RAL 9006 blank alu.	RAL 9011 graphite black
Meets the following Standards	EN61000-6-3 (EN55022), EN61000-6-2 (EN61000-2/3/4, EN61000-4-3), LVD 2006/95/EC (EN60335-1), Automotive EMC 2004/104/EC, RoHS 2011/65/EU Note: The above specifications are subject to change without prior notice.							

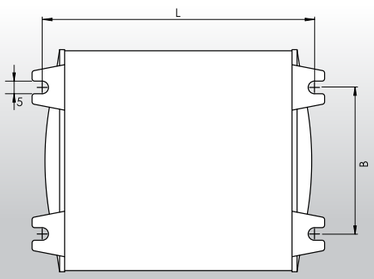

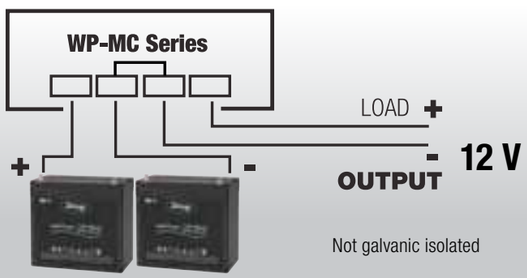

Not galvanic isolated

MG SERIES

	MG 24/12-30-I	MG 24/12-16-I	MG 24/12-3I	MG 48/12-30-I	MG 48/12-08-I	MG 12/12-08-I	MG 24/24-15-I	MG 12/12-30I
Article Nr.	60110021	60110020	60110030	60110023	60110024	60110019	60110025	60110026
TECHNICAL SPECIFICATIONS								
Converter type	voltage step down and stabilization					voltage stabilization		
INPUT								
Nominal input voltage	24 VDC	24 VDC	24 VDC	48 VDC	48 VDC	12 VDC	24 VDC	12 VDC
Input range, specifications	20 .. 35 VDC	20 .. 35 VDC	20 .. 35 VDC	30 .. 60 VDC	30 .. 60 VDC	9 .. 18 VDC	20 .. 35 VDC	9 .. 18 VDC
Input range, no defects	0 .. 35 VDC	0 .. 35 VDC	0 .. 35 VDC	0 .. 70 VDC	0 .. 70 VDC	0 .. 18 VDC	0 .. 35 VDC	0 .. 18 VDC
OUTPUT								
Nominal output voltage	12.5 VDC	12.5 VDC	12.5 VDC	12.5 VDC	12.5 VDC	12.5 VDC	24.5 VDC	12.5 VDC
Voltage adjustable	Yes	Yes	Yes	Yes	Yes	Yes	Yes	Yes
Output accuracy	3%	3%	3%	3%	3%	3%	3%	3%
Ripple, peak output voltage	1%	1%	1%	1%	1%	1%	1%	1%
maximum power output	400 W	200 W	38 W	400 W	200 W	110 W	400 W	490 W
continuous output power	360 W	200 W	36 W	360 W	100 W	110 W	360 W	420 W
Maximum output current	32 A	16A	3A	32 A	16A	8A	16A	30A
Continuous output current at 40 °C	up to 30 A	up to 16A	up to 3A	up to 30 A	up to 8A	up to 8A	up to 15 A	up to 30A
GENERAL								
Efficiency	>87%	>87%	>87%	>87%	>87%	>87%	>87%	>87%
Consumption no load	<25 mA	<25 mA	<25 mA	<25 mA	<25 mA	<25 mA	<25 mA	<25 mA
Ambient operating temperature	-10ºC .. +40ºC	-10ºC .. +40ºC	-10ºC .. +40ºC	-10ºC .. +40ºC	-10ºC .. +40ºC	-10ºC .. +40ºC	-10ºC .. +40ºC	-10ºC .. +40ºC
Storage temperature	-25ºC .. +85ºC	-25ºC .. +85ºC	-25ºC .. +85ºC	-25ºC .. +85ºC	-25ºC .. +85ºC	-25ºC .. +85ºC	-25ºC .. +85ºC	-25ºC .. +85ºC
Relative humidity in use	up to 95%, non-condensing							
Galvanic isolation	Yes, 500 VAC	Yes, 500 VAC	Yes, 500 Vac	Yes, 500 VAC	Yes, 500 VAC	Yes, 500 VAC	Yes, 500 VAC	Yes, 500 VAC
Cooling	Mechanical	Mechanical	Mechanical	Mechanical	Mechanical	Mechanical	Mechanical	Mechanical
PROTECTIONS								
Current / short circuit	Restricted by current rating							
Overheating, shut down	Power restricted by temperature							
MECHANICAL SPECIFICATIONS								
Faston in/ off, max thread thickness	6mm²	6mm²	6mm²	6mm²	6mm²	6mm²	6mm²	6mm²
Dimensions (h × w × d)	83×186×133mm	50×176×88mm	50×85×88mm	83×186×133mm	50×151×88mm	50×151×88mm	83×186×133mm	83×186×133mm
Mounting holes	dia 4mm, rh 91×177mm	dia 4mm, rh 58×168mm	dia 4mm, rh 58×168mm	dia 4mm, rh 91×177mm	dia 4mm, rh 58×143mm	dia 4mm, rh 58×143mm	dia 4mm, rh 91×177mm	dia 4mm, rh 91×177mm
Weight	1.4kg	630g	250g	1.4kg	630g	630g	1.4kg	1.4kg
International Protection rating	IP20	IP20	IP20	IP20	IP20	IP20	IP20	IP20
Housing	frame 8	frame 7	frame 7	frame 8	frame 6	frame 6	frame 8	frame 8
Housing material	Anodized aluminium, ABS end caps							
Housing colour	RAL 9006 white aluminium	RAL 9011 graphite black	RAL 9011 graphite black	RAL 9006 white aluminium	RAL 9011 graphite black	RAL 9011 graphite black	RAL 9006 blank aluminium	RAL 9006 blank aluminium
Meets the following Standards	EN61000-6-3 (EN55022), EN61000-6-2 (EN61000-2/3/4, EN61000-4-3), LVD 2006/95/EC (EN60335-1), Automotive EMC 2004/104/EC, RoHS 2011/65/EU Note: The above specifications are subject to change without prior notice							

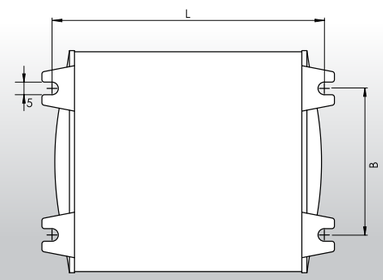

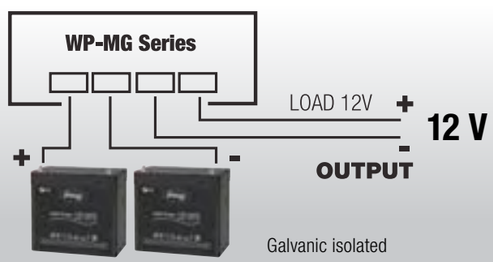

Galvanic isolated

NEW GUIDELINES

Guidelines
how to put systems together

Our distributors and resellers are on hand to provide assistance in determining the right energy system for your vessel. It is our many years' of experience that ensures that we can provide the very best advice. We offer yacht designers, boat builders and repair yards Advanced System Design specific to the information provided regarding the actual onboard power consumers (12,24,48 VDC, 230 V, 120 V, 3 x 380 VAC). Based on the load balance and additional important information required (see details below), we present a complete proposal which includes:

- A single line diagram showing all the components and the connections necessary for a well and properly functioning system
- A list of the system components with dimensions, weight and technical specifications and as required, references
- Pricing
- Report, if required, about a company that can handle the integration and installation (re-fit)
- If required, a multi-line diagram which can be used in the vessel documentation
- 5 year system warranty should a complete system with generator be required

Important details which we also like to know IN ADDITION to the Load Balance:

- Hull material steel / aluminium / polyester / carbon / wood
- Navigation area
- Engine cooling: wet or dry exhaust
- Shore power access 230 V 50 Hz, 120 V 60 Hz (50), global shore power access

System example of a single line diagram **50 ft motor yacht**

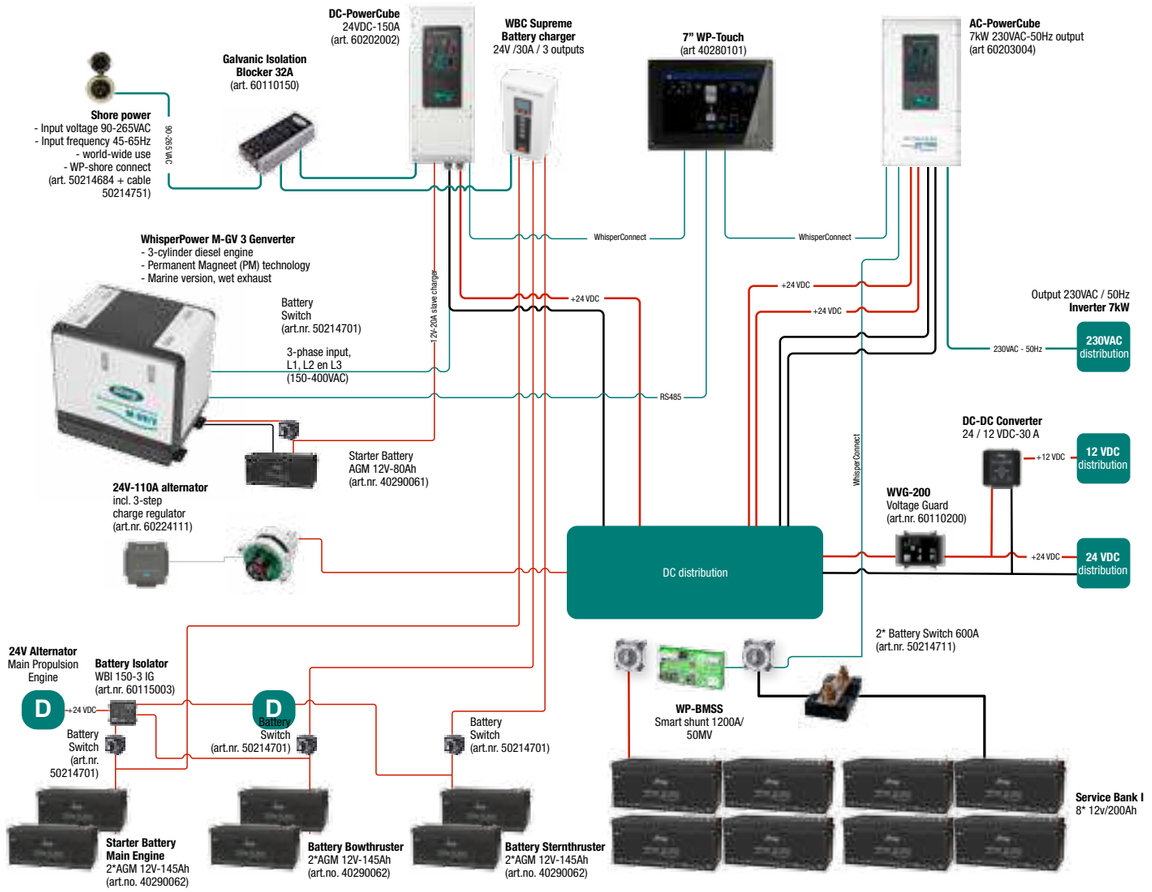

Example of a load balance

How to compose your system: start with the load balance and fill in the table below

Appliances	Number of appliances	Power demand per device in Watt	Use in hours per day	Daily consumption in kWh: devices x Watt x hours
Light consumers / AC				
❑ Laptop / PC				
❑ Small-screen TV				
❑ Flat-screen TV				
❑ Audio / DVD / etc.				
❑ Microwave / oven combi				
❑ Refrigerator*				
❑ Self cont airco*				
❑ Coffee machine				
❑ Cooker				
❑ Juicer				
❑ Hair dryer				
❑ 2 hob cooking				
❑ Battery charger / combi				
❑ Chargers for IPhone				

Appliances	Number of appliances	Power demand per device in Watt	Use in hours per day	Daily consumption in kWh: devices x Watt x hours
Heavy duty / AC consumption				
❑ Airconditioning				
❑ Airco airhandlers				
❑ 4 hob cooking				
❑ Grinder*				
❑ Welder*				
❑ Hydraulic equipment*				
❑ Refrigeration				
❑ Ice cube machine*				
❑ Diving compressor*				
❑ Other				
DC Consumption				
❑ 12 VDC				
❑ 24 VDC				
❑ 48 VDC				

International Yachtbuilders System Example

Fitted as standard with a WhisperPower diesel generator system with all essential installation kits.

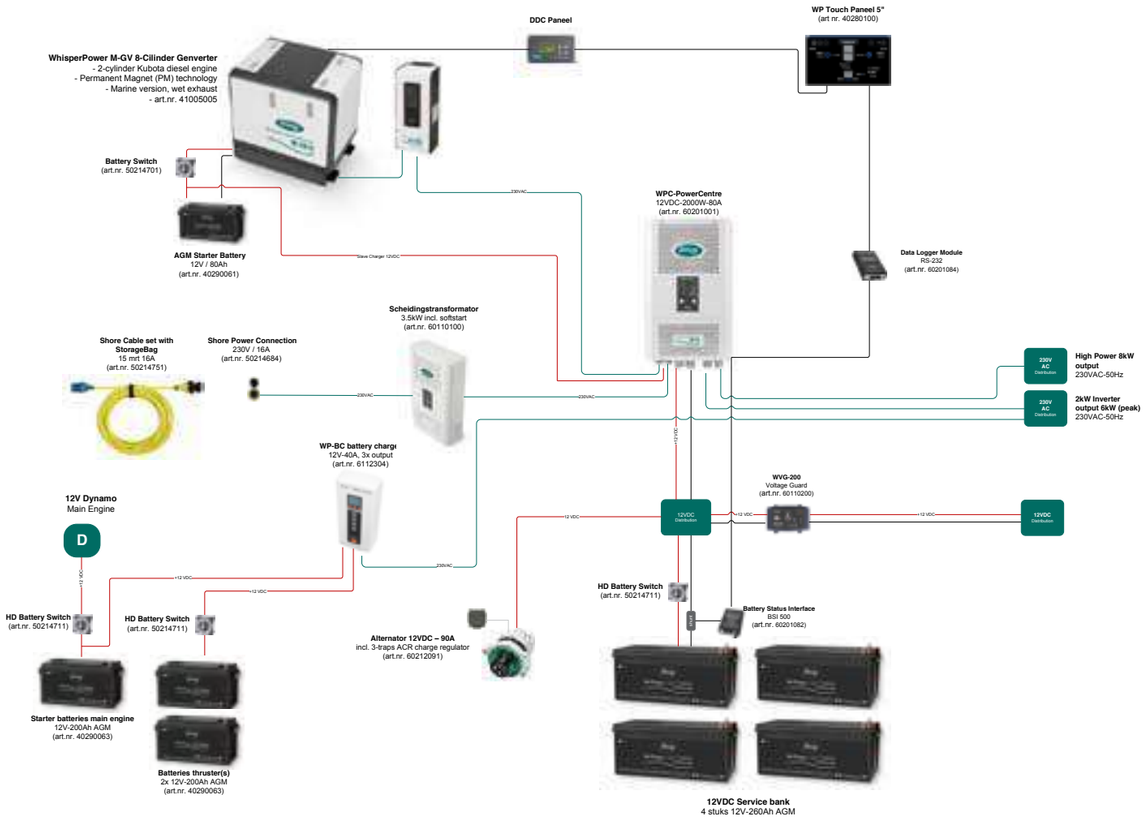

- **Variable speed diesel generator M-GV 8 or M- GV 10**
- **Complete installation kits including WP – WL and WP – GS waterlock and separator**
- **Optional inverter/charger, shore power support and battery system**

International Yachtbuilders System Example

Combined Genverter© generator – DC battery system with a 24VDC main battery (open traction, choice of yard) and main inverter for non-stop AC power availability.

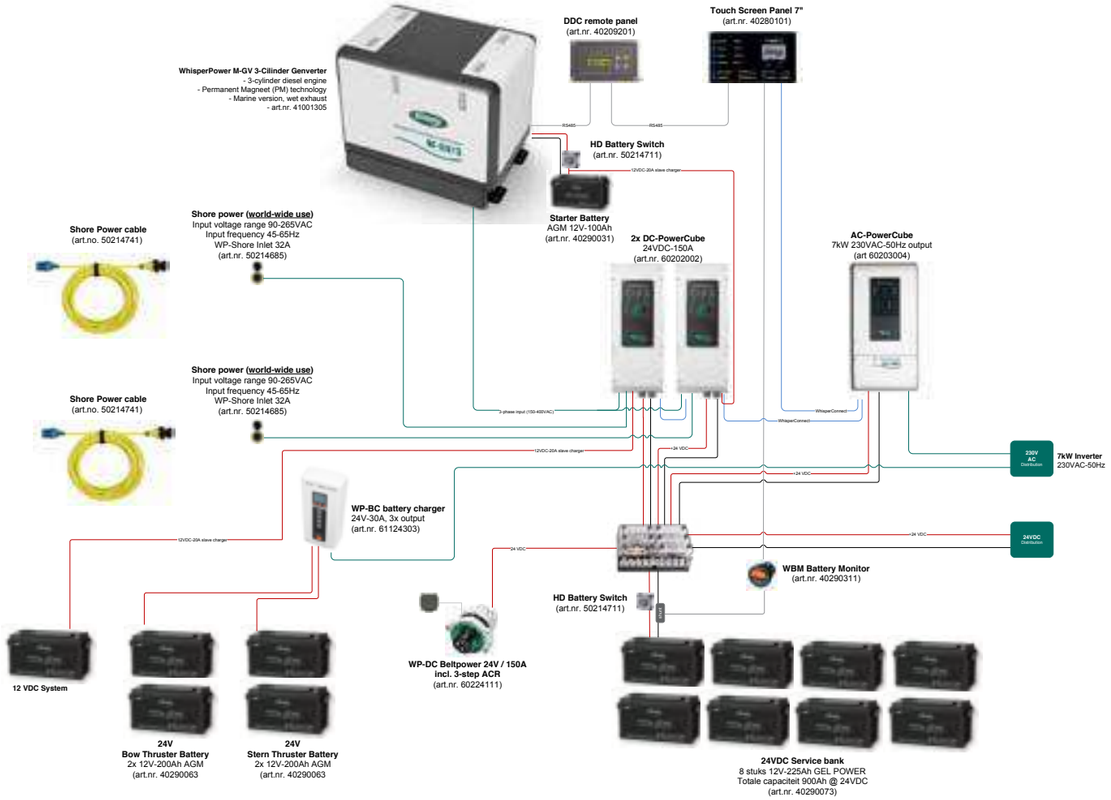

- **7 kWatt of AC Silent power by AC PowerCube 7 kW**
- **3 Cylinder Genverter© back-up generator with 2 x DC PowerCube charging incl. ship-to-shore**
- **Auxiliary high output alternator, 24 V DC 110 Amp, with three stage voltage regulator**

Dutch Yachtbuilders System Example

Combined Genverter© generator – DC battery system with a 24VDC main battery and 12 VDC storage plus charge systems for starter/ thruster batteries.

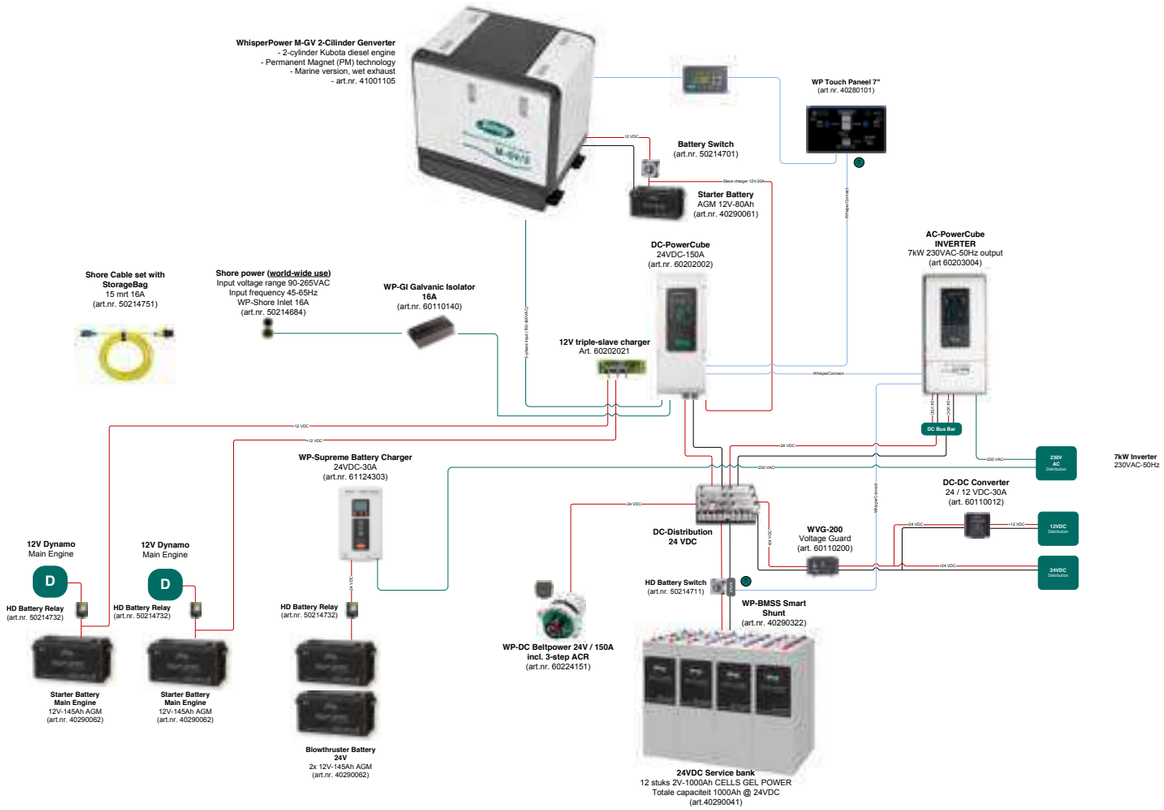

- **7 kW of AC Silent power for various appliances incl. Airco**
- **2 Cylinder back up generator with DC PowerCube ship-to-shore charging**
- **Auxiliary high output alternator, 24 VDC 150 Amp, with three stage regulator**

Dutch Yachtbuilders System Example

Combination of a WhisperPower "Classic" 1500 rpm single phase diesel generator, model SQ 12, with a "New School" Inverter/charger system.

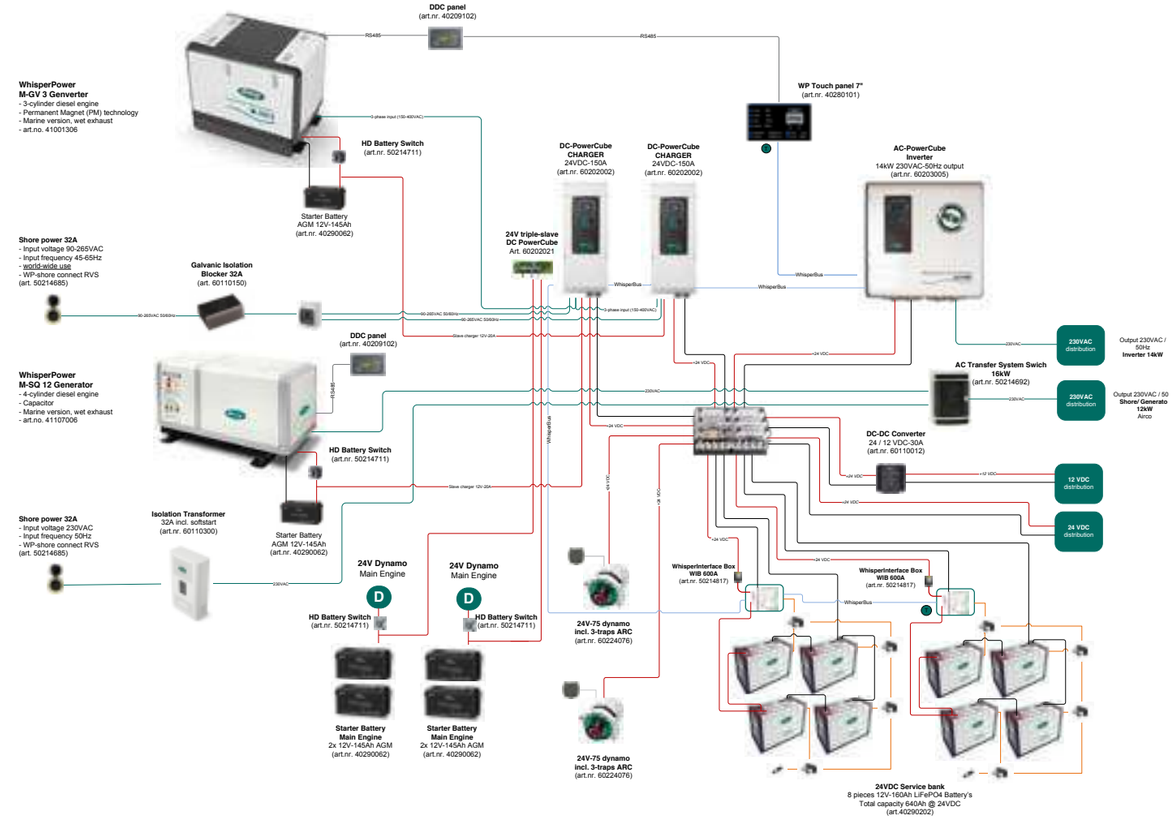

- **12 kVA 1500 rpm WhisperPower diesel generator**
- **WhisperSwitch Transfer system to channel all AC power sources**
- **3 Cylinder back up Genverter© back-up generator with 2 x DC PowerCube incl. ship-to-shore charging**
- **Monitoring and control integrated with Yacht Control TOUCH glass dashboard**

Products for Commercial Vessels & Super Yachts

World Class Systems
For commercial vessels

Over the past few years, WhisperPower has been investing heavily in products and systems for commercial vessels. We have increasingly more quality products available for inland and ocean-going ships and boats including fishing vessels.

Key features:

- Developed for non-stop, 24/7 use
- Suitable for use in high ambient temperature conditions
- Extremely durable - electronics with an MTBF (Mean Time Between Failures) rate of over 10 years
- Depending on the product, delivered as standard with certification (Lloyds, DNV, GL) or certified by type, incl. CCRII
- Equipped with standard alarm functions in accordance with type approval / GMDSS

Industrial Battery Chargers: SupremePro

New range of heavy-duty battery chargers for charging batteries or use as a power supply. Features "global" input from 90-265 VAC, 50 Hz or 60 Hz, with multiple DC outputs. The applied latest switched mode technology renders the SupremePro very compact and light weight. Robust, industrial DC terminals conforming to CE, ABYC A-31 and IEC60945.

Industrial inverters: AC PowerCube or PowerCentre

A wide selection of DC - AC inverters from 500 VA to 27 kVA, in single or three-phase. The perfect solution to feed sensitive AC equipment separately and without interruption, independently from the generator.

"Long Life" maintenance-free batteries

A wide range of maintenance-free, gas-tight batteries for start, service or emergency operation. Available from12 Volt AGM to 12 Volt Lithium-ion, in any required capacity, with the option to be delivered complete in rack with charging system.

DC - DC Converters

24 VDC to 12 VDC converters available in versions with or without galvanic isolation in any required capacity. Highly efficient thanks to switched mode technology.

Diesel generators: from small to large

WhisperPower diesel generators fitted with a diesel engine with more than 1 cylinder are suitable for continuous operation. The SQ series of 1500/1800rpm generators go up to 62 kVA (configured in parallel). The Genverter© systems, up to 15 kVA, are delivered with DC or AC output and are ideally suited as a night generator in combination with a WhisperPower inverter and a WhisperPower battery system.

The bridge of a commercial vessel - a place where problem free operation of the onboard electronics is vital. WhisperPower's systems for the provision of power, emergency power and energy storage ensure safe and trouble free sailing (photo Damen Shipyards)

Suitable applications for
WhisperPower Systems

- Patrol vessels
- Pilot boats
- Supply vessels
- Public transport
- Tour boats
- Fast crew boats
- Tugboats
- Coast Guard vessels
- Fishing boats
- Dredgers
- Pontoons
- Freighters
- Ferries
- Military vessels
- Maintenance vessels for wind farms
- Off-shore

SQ 25 15090/1800 compact generator

SupremePro/DC Cubes

Industrial battery chargers, 40-150 A , Lloyds approved

AC PowerCube

Industrial Inverter
24 V-230 V, 3.5kW-14kW

WP Combi

24 V Inverter
3kW “Best Deal” with or without charger

DC-DC Converters

- From 5 A to 100 A
- With or Without galvanic isolation

Genverter© Generators

- Economical and silent
- AC or DC
- Programmable speed

1500/1800 rpm diesel Generators

- Super silent and compact SQ range
- 6-54 kVA
- Russian River Certificate and 2C (China) standards

2 Volt Cells

From 210-1650 Ah

Lithium-ion Batteries

LiFe P04, from 160 Ah - 12 V to large capacities

GEL and AGM Batteries

Maintenance free batteries
for start and service applications

Product standards
approvals and certificates

WhisperPower’s main manufacturing facility is located in Drachten (Friesland), the Netherlands. Our entire operation and processes conform to ISO 9001-2008 standards. A significant number of our WhisperPower diesel generators are also certified to various national standards, for example Chinese and Russian Maritime Type Approvals due to the strict investigative procedures and regulations for compliance such as audits that can be carried out by third party officials.

Russian River Register Type Approval
Russia has become an important market for WhisperPower products. In this region, it is compulsory for vessels, products and parts sold to carry Russian River Register approval. This federal institution is responsible for the classification of vessels including pleasure craft. We are proud that our products are in full compliance with this institution’s requirements.

Other type approvals
WhisperPower products can be type approved for specific classification institutes such as Lloyds Register, DNV, Germanischer Lloyds and ABS set safety and can also meet environmental standards for the design, construction and operation of ship and yachts. All of our power generation and power electronics carrying the Green label can be certified according to a required official Regulation. Individual Type Approval is not usually included in the standard pricing.

China Type Approval ZC
China (PRC) is another emerging market for WhisperPower. As with the Russian market, similar regulations apply in terms of conformity. Products sold must comply with Chinese Type Approval ZC. WhisperPower Shanghai has coordinated the certification of all WhisperPower generation products sold to this market.

Russian Maritime Register

Environmental Protection Agency

Lloyd’s register quality assurance ISO9001

CCR II

CHINA Type Approval

Delivered anywhere, anytime

WhisperPower Service & Support

At WhisperPower, service and support goes beyond production and sales. We are and happily remain responsible for our products, systems and accessories. You can therefore count on all the necessary service and support both before and after your purchase. From initial system advice through to installation and from commissioning to outstanding maintenance and warranty support, first class service is our aim and priority.

System advice and design focused on your specific needs

Our engineers and advisers have extensive experience in the development and implementation of electrical systems. They take pride in helping you make the right plans for your system's exact needs, be it the installation of a Genverter© or generator or more comprehensive and complex systems. We design a fit for purpose system with optimum efficiency. This hard and fast rule also applies if you are combining a generator system with, for example, an inverter, battery charger or solar or wind power.

Global Sales and Distribution network

The ever growing WhisperPower network of dealers and distributors can be found all over the world. Our international brand is locally represented by sales and distribution partners and importers. Specialists in their field, well-trained across the product range and professional, they are on hand and happy to assist for mobile, maritime and domestic applications.

Commissioning and System set up

Once delivered, WhisperPower's technical team also takes care of the installation and commissioning of the generator system where possible, In some countries - including the Benelux region - this service is included. You can, therefore, rest assured that your system is installed according to the appropriate guidelines and terms and conditions. For more information on the terms and conditions, please contact us.

24/7 Hotline for Service & Support

In case of malfunction or repair, our technical department is ready to be of service. Contact us directly 24/7 from anywhere in the world via the international WhisperPower Service & Support Hotline on +31 (0) 512 571 555. Where possible, we will assist you directly or alternatively, we will put you in touch with our local technical sales partners.

Our starting point: On-site service

The representatives from our global network will provide you with service and technical support for repairs or malfunctions. Where possible, support and service work will be carried out on-site. This applies worldwide.

Regular training: up-to-date expertise

Knowledge and expertise form the foundation for the best possible service. Every WhisperPower technical sales partner has up-to-date knowledge and the benefit of our global experience. Regular training courses ensure our specialists stay abreast with and well informed about all of our products, both in terms of systems and applications. You can, therefore, be certain that WhisperPower offers far more than a box with a device: we offer you our expertise as standard.

Minimal downtime during repairs

We have mobile service partners active in every conceivable region. To keep down time to a minimum, trouble shooting and repair work are carried out on-site. If needed, we will supply a replacement system to ensure continuous operation is maintained.

Up-to-date product specifications

Detailed specifications of the WhisperPower products can be found on our website and throughout this brochure and other printed product information. As we continuously strive to improve our products, specifications can be subject to change without prior notice.

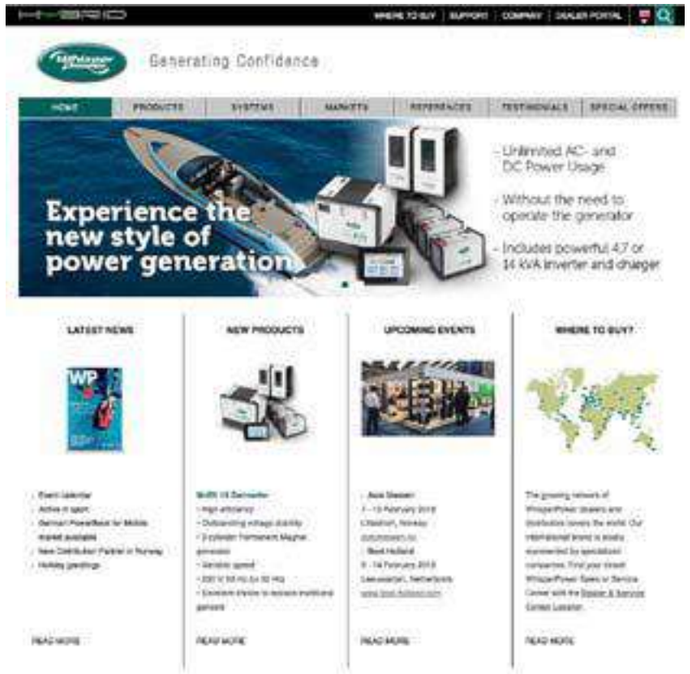

website featuring more than 20 languages

Specifications may be subject to change without prior notice

Long-term peace of mind

The WhisperPower WarrantyPlan

When you purchase our products and systems you have the certainty of a dedicated WhisperPower WarrantyPlan. This plan covers, as standard, the costs of repairs and/or replacement of defective parts when products are used under 'normal' conditions. The conditions of the WhisperPower WarrantyPlan are specific to the product and the use there of in your system. The standard warranty term for equipment is two years. For authorized system installations with a maintenance contract, the warranty period is extended to five years.

The warranty period for generator systems is based on a maximum number of operating hours. For 3000/3600rpm sets it is a maximum of 1000 operating hours and for the 1500/1800rpm sets and the Genverter© 7i and 50/100 / 200 kW models, the limit is 2000 hours. Additional costs for installation, travel and transport are not included unless otherwise agreed.

More information on the exact terms and conditions of the WhisperPower WarrantyPlan can be found on our website.

Order: sales@whisperpower.com I +31 (0) 512 571 565

Maritime • Mobile • Land I www.whisperpower.com

The Company

WhisperPower was founded in 2007 for the manufacture and worldwide sale of diesel generators and related items, which had been sold until this point under the brand name Mastervolt. Since then, the company has quickly and successfully grown and developed especially in terms of innovation and quality.

In 2009 Hybrid Power Systems BV was founded to develop and produce combined hybrid power and propulsion systems for superyachts and commercial vessels.
Since 2010, the product portfolio has been significantly expanded with products and components which form complete electrical systems for vehicles, vessels or locations which do not have (permanent) connection to the public grid. They can be assembled for plug and play solutions.

WhisperPower has used its years of experience in developing systems containing a diesel engine to develop in-house, a new generation of power electronics. The product range covers power range options from 500 watts to 500 kW.

WhisperPower Group of Companies

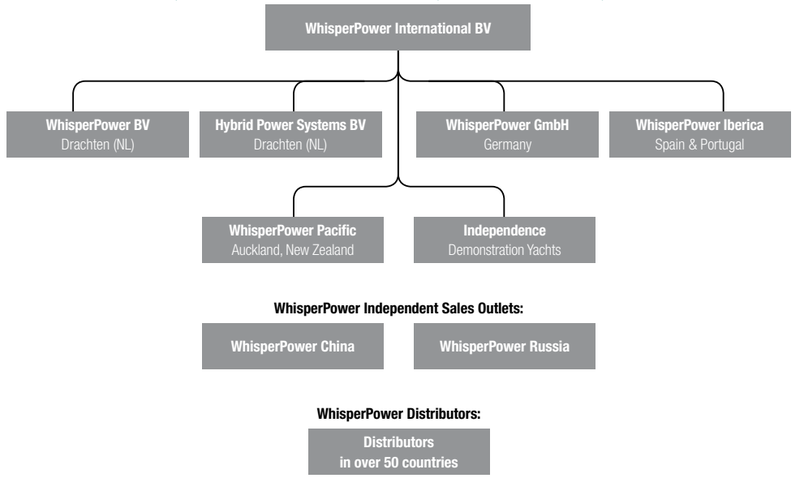

In-house production

A large proportion of WhisperPower's production takes place in a modern 5500 m² factory in the Netherlands where work is done in accordance with ISO standards. Each integrated diesel product is tested extensively (3 hours) and receives a test certificate.

International Network

A comprehensive network of national and international dealers, installers and distributors ensures that WhisperPower products and systems find their way to the end user. In many countries, the network operates from an established WhisperPower commercial site. Service and warranty come first for us! For an overview of our network, please go to: www.whisperpower.com/nl/11/28/dealers/dealer-locater.html

Manufacturing

Most of the manufacturing process is carried out in-house in our 5500 m² building, located in Drachten, Friesland, the Netherlands. The building is a showcase for the very latest thinking in terms of energy-friendly sustainability and includes facilities such as solar cells and climate control based on an eco-energy recovery system. We save as much energy as possible in all our daily operations, using thermal storage for residual heat or power. All our products and systems are severely in-house tested before shipping.

Our (marine) costumers

WhisperPower is grateful for the support received from our various customers. Our current client list reflects the position we have achieved in the international marine markets over the past 8 years.
For further details, a comprehensive user and application section for each relevant market sector can be found on our website www.whisperpower.com.

AQUANAUT
elling
Baltic Yachts
DE BOARNSTREAM
BOTNIA
Contest
de Alm Jachtbouwers
FM
Hallberg-Rassy
VDH
HJB Holland Jachtbouw
Hanse
Steeler Yachts with ambition
Targa
Vanquish Yachts
NAJAD Yachts of Sweden
NAUTOR'S SWAN
marex
VAN DER VALK
MULDER
Viknes
MOONEN YACHTS
PIPER BOATS
ROYAL HUISMAN
REGAL
LINSSEN YACHTS Since 1949
Sunbeam
NORTH-LINE YACHTS
AXOPAR

Volharding Shipyards
XO BOATS
Windy
WAJER
SANLORENZO
OYSTER
ARES Shipyard
ST
Sanga
Keppel Shipyard
DAMEN
DELPHIA
LAKY VERF
KUIPERS WOUDSEND BV
NAUTIC
MARITIME PARTNER
professional powercraft
Shell
Van Oord

References (China)

遍步全球的服务和配送网络

Blue Bay Yacht
King Bay Yacht
Sunquest maritiem Ltd
Zhoushan Alpha Yacht
Green Island maritiem(Ningbo)
Zhejiang Millennium maritiem Ltd
Shanghai Luck Yacht Manufacture Co. Ltd
Shanghai New Star Yacht
Zhuhai Maxi maritiem
Zhuhai Jet Tem maritiem
Shenzhen Farnova Yacht
Poly maritiem maritiem & Engineering Co.
Zhongshan Dafeiyang Yacht
Hainan Genesis Yacht
Xiamen Hansheng Yacht
Fuzhou Allegro Yacht
Suzhou Activa maritiem
NanChang Royaler Yacht
Suzhou Xingma Yacht
Changzhou FRP Yacht
Suzhou Dehong Yacht
Suzhou Mercury Club & maritiem Co.;Ltd
Dalian Hengda maritiem

40 EXHIBITIONS PER YEAR

METS Super Yacht Pavillion 2015

Electric Marine and Hybrid Amsterdam 2016

Annual presence at METS RAI Amsterdam

In – Water Boat Show Amsterdam 2016

Boot Dusseldorf 2016

Inland Marine Exhibition Holland - Germany

Stockholm International Boatshow

Presentation displays for marine, mobile and off-grid markets

Product displays with dummy

Products and POS available for shows and shops

Promotional vehicles with live running power systems available for events, shows, open houses etc.

BUY FROM MARINE SHOPS

Shop racks available from stock – 1 or 2 metres wide

Perfect storage for our Spare Parts

BUY FROM DEALER WEBSITE

PRINT

SPORTS & COMPANY FASHION

Bike wear for race bikers or MTB riders

Corporate wear for staff

and dealers

WEB

Technical information available in over 20 languages

Index A-Z

WhisperPowerBook

A

AC automatic transfer systems 112
Accessories: generator 48
AC Alternators 54
AC connections / Shore Power 110
AC instrumentation 112
AC PowerCube 62
A-kit spare parts 50
Automatic battery chargers 70
Alternators 52

B

Baseplate kit 50
Batteries 2 V 94
Batteries 12 V 90
Batteries AGM 90
Battery cables 48
Battery chargers 76
Batteries GEL 92
Battery Instrumentation 100
Battery switches 124
B-kit spare parts 50
Boiler kit 50
Boxcooler kit 50

C

Cables 48
Chargers 76
Combi's 70
Converters DC-DC 134
Coolant hoses 50
Coolant fluid 50

D

DC & AC read out functions 102
DC-DC converters 134
DC alternators 52
DC distribution 116
DC distribution kits 118
DC Generator 40
DC PowerCube 84
Diesel Generators 32
Dry exhaust 49

E

Earth leakage breakers 112
Electronic battery isolators 128
Electronic isolation diodes 128
Exhaust hose 50
Exhaust kit 49

F

Fuel filter 50
Fuel hose 50
Fuses 118

G

Galvanic Isolators 128
Generators 30
Genverters 34

H

High Power Battery Chargers (Pro series) 80
Heavy Duty DC switch 126

I

Installation components 48
Installation Kits: generator 48
Inverters 60
Inverter / charger combi's 62
Isolation transformers 128

K

Keel cooling generator 32

L

Lithium ION batteries 96
Lubrication oil 48

M

Marine generator 32
Maintenance free batteries 90
MPPT tracker 104

N

Navigation / Control Panel 102

O

Oil resistant cable 48
Oil filters 48

P

Piccolo generator 34

R

Remote cables 48
Rubber exhaust hose 48

S

Selection switches 112
Shore power connections 110
Silencer 48
Sine wave Combi 62
Sine wave Inverters 62
Single phase battery chargers 78
Solar power 104
Spare parts 48
Starter battery kit 48
Syphon breaker 48

T

Transformers 136
Touch panels 102

U

Ungrounded generator 32

V

Vibration mounts 48
Voltage converters 136

W

Water / gas separator 46
Water / gas separator kit 46
Water inlet kit 48
Water lock 46
Water tight switches 122
Whisper Touch 102

Genverter Piccolo Range

The new Standard in Power Generation

Generating Confidence

whisperpower.com

Experience the new style of yachting

Unlimited AC Power usage on board, without generator and without any other engine running. The resulting comfort of installing a “Hybrid Power System” from WhisperPower.

Electric cooking, washing, drying, using the air conditioning - now everything can be done without irritating noise or annoying exhaust fumes with the added benefit of full batteries, always.

Your dealer:

Whisper Power

Generating Confidence

T: +31 512 571 550 | sales@whisperpower.com | **whisperpower.com**